DOCUMENT DATA FORM **Your Name: Nick Carino**

Document Title or Description (max. 254 characters): Circle: Same as cover (or fill in below)

Drawing book 18 - strap anchors

Include work order no. and floor no. if applicable

Roll # DB02	**Doc. ID (report #, dwg. #):**	
Document Date:	**Document Author Name:**	**Author Organization:**

KEYWORDS – HIGHLIGHT ALL THAT APPLY

Level 1

Bankers Trust	Project 4	(WTC 1) North Tower	Add
Below Grade	Project 5	(WTC 2) South Tower	
Concourse	Project 6	WTC 3 - Marriot Hotel	
Electrical Substation	Project 7	WTC 4 - South Plaza Bldg.	
Liberty Plaza	Project 8	WTC 5 - North Plaza Bldg	
PATH Station	WFC 1 - Oppenhiemer Dow	WTC 6 - Customs House	
PATH Terminal	WFC 2 - Tower B	WTC 7	
Project 1	WFC 3 - American Express	WTC Complex	
Project 2	WFC 4 - Tower D	WTC Plaza	
Project 3			

Level 2

Accident analysis & risk	Fire protection	Misc. Performance Problems	(Structural)
Architectural	Fire service	News coverage	Tenant alterations
Data request	Landscaping	Police	Tenant Space
Emergency management	Management	Security	Add
Evacuation	Mech./elec.		

Level 3

1993 explosion	Cranes	Frame	Roof	Weight
A/E fitout	Criteria	Frame analysis	Safety	Weld detail
A-242	Dampers	Frequency	Schedule	Weld size
A-36	Debris	Fuel	Sculpture	Welding
A-497	Deck	Furniture layout	Security system	Wind
Aircraft impact	Deflection	Generators	Shear knuckle	Windows
Air cooled condensers	Demolition	Guidelines	Shear test	Yield strength
Analysis	Design	Gypsum board	Shear Stud	Add
Angles	(Detailing)	Hat truss	Shop drawings	
Antenna	Doors	Human comfort	Shortening	drawing books
Artifacts	Drawings	HVAC	Slab	
Asbestos	Eastern States Steel	Index	Slurry wall	
Base plate	Egress	Inspection	Smoke control	
Beams	Elevator	Insulation	Smoke test	
Bid documents	Elevator Shaft	Job number	Spandrel beam	
Bid Invitation	Emergency	Joist	Specifications	~~[illegible]~~ strap anchors
Bow tie	communications	L-50	Splices	
Bracing	Equipment	Lighting	Sprinkler	
Bridging truss	Erection marks	Loads	Stability	
Building code	Errors & Omissions	Maintenance	Stairways	
Calculations	Escalator	Marking	Standards	
Carpet	Expansion joint	Mesh reinforcement	Steel	
Ceilings	Exterior columns	Mill inspection	Steel composition	
Certification	Fabrication	Model	Stiffness	
Chillers	Family member	Mullion	Structural review	
Cladding	Field survey	Operations	Surveillance	
Collapse	Fire alarms	Paint	Survey	
Columns	Fireproofing	Partition layout	Survivor	
Communication systems	Fire spread	Partitions	Tenant list	
Composite truss	Fire testing	Photos	Tenant occupancy	
Computer output	Firetower	Pipes	Testing	
Computer program	Flag Pole	Plumbing	Tie	
Concrete	Flammability	Prestressing	Tolerances	
Connections	Floor	Probability, uncertainty	Transfer Girders	
Construction	Floor load	Quality control	Triad	
Contract	Floor slab	Ramp	Truss	
Core beams	Floor system	Reinforcing (strengthening)	Vestibule	
Core columns	Floor trusses	Renovation	Vibration	
Corrosion	Formwork	Repair	Walls	
Cracking	Foundations	Research & Development	Water supply	
	Fracture		Weather	

WTCI-1044-LERA

ROOK 19

ANCHOR STRAPS
FOUNDATION DETAIL

SKILLINGS, HELLE, CHRISTIANSEN, ROBERTSON — Structural & Civil Engineers

PROJECT	TITLE	DATE
THE WORLD TRADE CENTER	STRAP ANCHORS - KEY PLANS - INDEX & GENERAL NOTES	10/ 1/69

REVISIONS

INDEX

18-AB1- 1	INDEX & GENERAL NOTES	
18-A1 - 2	ELEV. 242	
18-A1 - 3	ELEV. 264	TOWER A
18-A1 - 3.1	ELEV. 264	TOWER B
18-A1 - 4	ELEV. 274	TOWER A
18-A1 - 4.1	ELEV. 274	TOWER B
18-A1 - 5	ELEV. 284	TOWER A
18-A1 - 5.1	ELEV. 284	TOWER B
18-A1 - 6	ELEV. 294	TOWER A
18-A1 - 6.1	ELEV. 294	TOWER B
18-A1 - 7	FLOOR 1	TOWER A
18-A1 - 7.1	FLOOR 1	TOWER B
18-A1 - 8	FLOOR 2	TOWER A
18-A1 - 8.1	FLOOR 2	TOWER B
18-A1 - 9	FLOOR 3	
18-A1 -10	FLOOR 4	
18-A1 -11	FLOOR 5	
18-A1 -12	FLOOR 6	
18-A1 -13	FLOOR 7	TOWER A
18-A1 -13.1	FLOOR 7	TOWER B
18-A1 -14	FLOOR 9	TOWER A
18-A1 -14.1	FLOOR 9	TOWER B
18-A1 -15.1	FLOOR 10, 11	TOWER A
18-B1 -15.2	FLOOR 10	TOWER B
18-B1 -15.3	FLOOR 11	TOWER B
18-AB1-16.1	FLOOR 12 - 17	TOWER A, FLOOR 14 - 17 TOWER B
18-B1 -16.2	FLOOR 12	TOWER B
18-B1 -16.3	FLOOR 13	TOWER B
18-AB1-17	FLOOR 15	
18-AB1-18	FLOOR 19 - 26	
18-AB1-19	FLOOR 27 - 33	
18-AB1-20	FLOOR 34	
18-AB1-21	FLOOR 35 - 38	
18-AB1-22	FLOOR 39 - 40	
18-AB1-23	FLOOR 41	
18-AB1-24	FLOOR 43	
18-AB1-25	FLOOR 44	
18-AB1-26	FLOOR 45	
18-AB1-27	FLOOR 46	
18-AB1-28	FLOOR 47	
18-AB1-29	FLOOR 48	
18-AB1-30	FLOOR 49-55	
18-AB1-31	FLOOR 56	
18-AB1-32	FLOOR 57	
18-AB1-33	FLOOR 58-59	
18-AB1-34	FLOOR 60	
18-AB1-35	FLOOR 61-63	
18-AB1-36	FLOOR 64-66	
18-AB1-37	FLOOR 67-68	TOWER A
18-AB1-38	FLOOR 69	TOWER A
18-AB1-39	FLOOR 70-71	
18-AB1-40	FLOOR 72-73	
18-AB1-41	FLOOR 74	
18-AB1-42	FLOOR 75	
18-AB1-43	FLOOR 77	
18-AB1-44	FLOOR 78	
18-AB1-45	FLOOR 79	
18-AB1-46	FLOOR 80	
18-AB1-47	FLOOR 81	
18-AB1-48	FLOOR 82	
18-AB1-49	FLOOR 83	
18-AB1-50	FLOOR 84-86	
18-AB1-51	FLOOR 87-88	
18-AB1-52	FLOOR 89-92	
18-AB1-53	FLOOR 93	
18-AB1-54	FLOOR 94	
18-AB1-55	FLOOR 95	
18-AB1-56	FLOOR 96	
18-AB1-57	FLOOR 101	
18-AB1-58	FLOOR 102-104	
18-AB1-59	FLOOR 105	
18-AB1-60	FLOOR 106	

GENERAL NOTES

1. DETAIL INDICATED 50A IS DETAIL 5CA SHOWN ON DRAWING 8-AB2-50, DETAIL INDICATED 8.1 IS DETAIL 8.1 SHOWN ON DRAWING 8-AB2-8.

LICENSED PROFESSIONAL ENGINEER — LESLIE E. ROBERTSON — No. 34360 — STATE OF NEW YORK

SKILLING, HELLE, CHRISTIANSEN, ROBERTSON — Structural & Civil Engineers

PROJECT	TITLE	DATE
THE WORLD TRADE CENTER	ANCHOR DETAILS - EXTERIOR WALL - INDEX	11/ 7/69

REVISIONS

18-AB4- 1 INDEX
18-AB4- 2.1 ANCHOR DETAILS AT EXTERIOR WALL
18-AB4- 2.2 ANCHOR DETAILS AT EXTERIOR WALL
18-AB4- 3.1 DETAIL PLANS A, G
18-AB4- 3.2 DETAIL PLAN C
18-AB4- 3.3 DETAIL PLANS D, E, F
18-AB4- 4.1 DETAILS E61 - E67
18-AB4- 4.2 DETAILS E60, E69
18-AB4- 4.3 DETAILS E68, E68A
18-AB4- 4.4 DETAILS E70, E70A, E71, E71A, E74
18-AB4- 4.5 DETAILS E75, E75A
18-AB4- 5.1 DETAILS E50, E51, E52, E80 - E83
18-AB4- 5.2 DETAILS E40, E42, E45, E53 - E55
18-AB4- 5.3 DETAILS E44, E56 - E59, E8[illegible]
18-AB4- 5.5 DETAILS E51D, E52D
18-AB4- 5.6 DETAIL E 54A
18-AB4- 5.7 DETAIL E 59A
18-AB4- 6.1 DETAILS 159, 160, 161, 163C
18-AB4- 6.2 DETAILS 150 -158, 162, 163A, 163B, 164 - 169
18-AB4- 7.1 DETAILS 8.4, 8.10, 8.X
18-AB4- 7.2 DETAIL 10.1
18-AB4- 7.3 DETAILS 10.2, 10.3, 10.4
18-AB4- 8.1 DETAILS 12.1,12.2,12.3,12.4,12.5,12.9,12.10
18-AB4- 8.2 DETAILS 12.6, 12.7, 12.8
18-AB4- 8.3 DETAIL 12.11
18-AB4- 9 DETAILS 13.1, 13.2, 13.3
18-AB4- 10.1 STUD DETAILS A & D
18-AB4- 10.2 STUD DETAILS B, C, & E & F

LICENSED PROFESSIONAL ENGINEER
LESLIE E. ROBERTSON
No. 34360
UNIVERSITY OF THE STATE OF NEW YORK

SKILLING, HELLE, CHRISTIANSEN, ROBERTSON — Structural & Civil Engineers

PROJECT	TITLE	DATE
THE WORLD TRADE CENTER	DRAWING BOOK 18 - ANCHOR STRAPS	

REVISIONS

18 - AB1 Anchor Straps - Key Plans - Core

18 - AB2 Anchor Straps - Details - Core

18 - AB3 Anchor straps - Key Plans - Exterior Wall

18 - AB4 Anchor straps - Details - Exterior Wall

DRAWN

REVIEWED

SKILLING, HELLE, CHRISTIANSEN, ROBERTSON — Structural & Civil Engineers

PROJECT THE WORLD TRADE CENTER | TITLE ANCHOR STRAPS - KEY PLAN - ELEV. 242 - TOWER A | DATE 10/30/68

REVISIONS

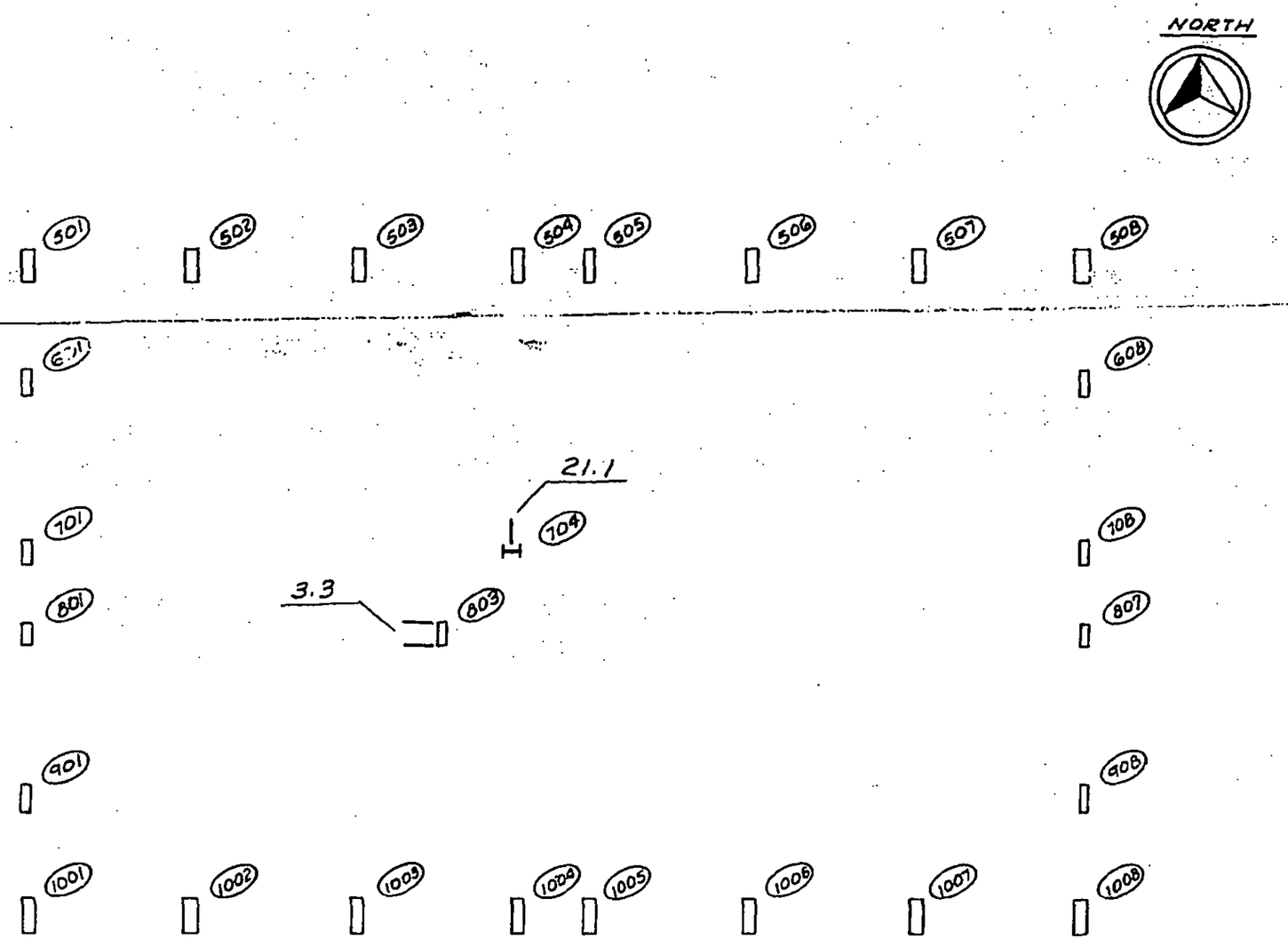

LICENSED PROFESSIONAL ENGINEER
LESLIE E. ROBERTSON
No. 34360
UNIVERSITY OF THE STATE OF NEW YORK

DESIGNED

DRAWN
S. Wexler

REVIEWED

18-A1-2

SKILLING, HELLE, CHRISTIANSEN, ROBERTSON — Structural & Civil Engineers

PROJECT THE WORLD TRADE CENTER | TITLE STRAP ANCHORS - KEYPLAN - ELEV. 264 - TOWER A | DATE 10/30/68

REVISIONS

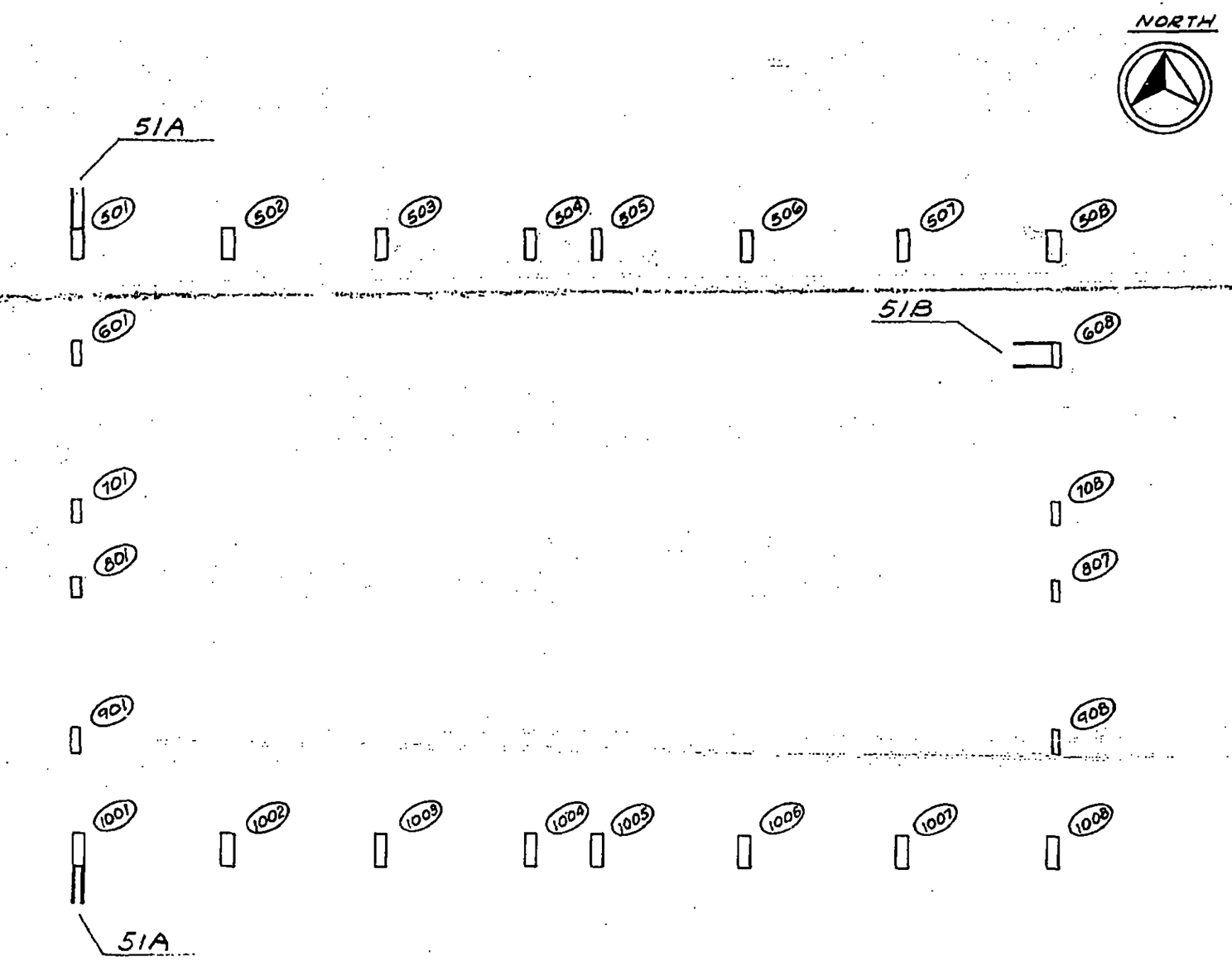

DESIGNED

DRAWN S. Wexler

REVIEWED

LICENSED PROFESSIONAL ENGINEER — LESLIE E. ROBERTSON — No. 34360 — UNIVERSITY OF THE STATE OF NEW YORK

18-A1-3

SKILLING, HELLE, CHRISTIANSEN, ROBERTSON — Structural & Civil Engineers

PROJECT: THE WORLD TRADE CENTER

TITLE: STRAP ANCHORS KEY PLAN - ELEV. 264' - TOWER 3

DATE: 6/28/69

REVISIONS

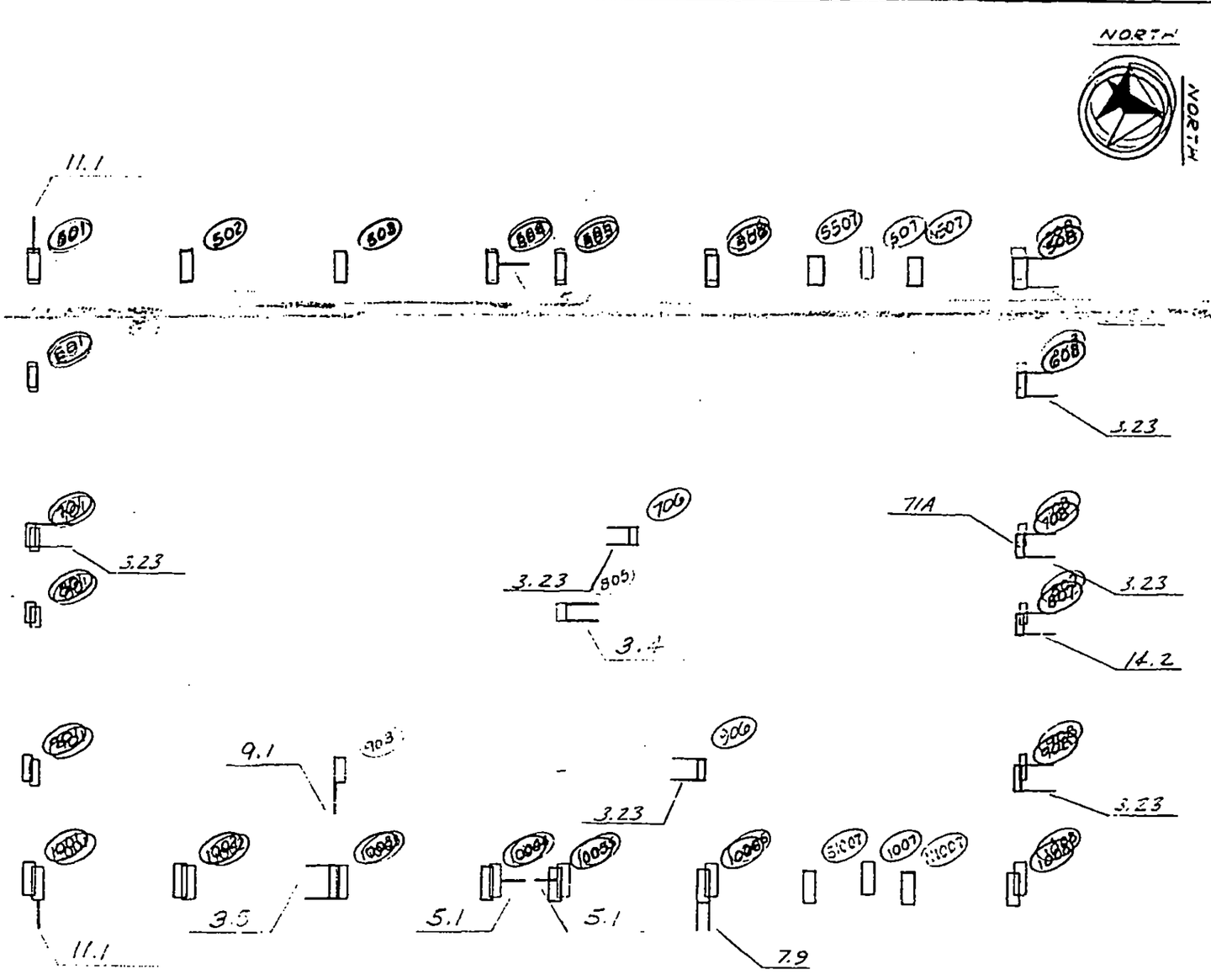

LICENSED PROFESSIONAL ENGINEER
LESLIE E. ROBERTSON
LICENSED PROFESSIONAL ENGINEER
LESLIE E. ROBERTSON
NEW YORK
No. 34360
UNIVERSITY OF THE STATE OF NEW YORK

DESIGNED
DESIGNED
DRAWN
DRAWN
REVIEWED
REVIEWED
W. Brewer

18-81-3.1

SKILLING, HELLE, CHRISTIANSEN, ROBERTSON — Structural & Civil Engineers

PROJECT THE WORLD TRADE CENTER | TITLE STRAP ANCHORS - KEY PLAN - ELEV. 274 - TOWER '8' | DATE 5-20-69

REVISIONS

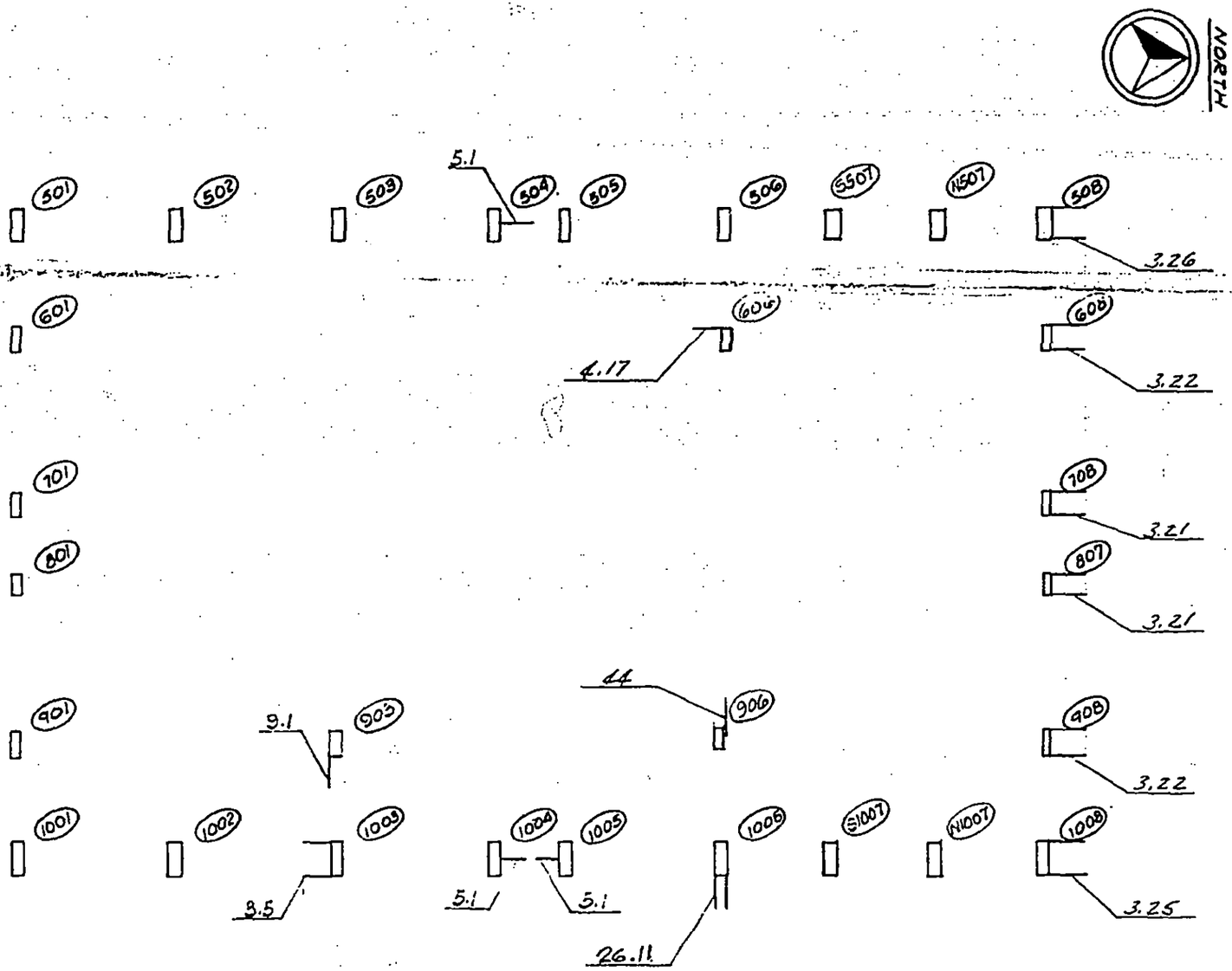

LICENSED PROFESSIONAL ENGINEER
LESLIE E. ROBERTSON
No. 34360
UNIVERSITY OF THE STATE OF NEW YORK

DESIGNED

DRAWN S.T.M.

REVIEWED W. Brewer

18-81-4.1

SKILLING, HELLE, CHRISTIANSEN, ROBERTSON — Structural & Civil Engineers

PROJECT THE WORLD TRADE CENTER | TITLE STRAP ANCHORS-KEY PLAN-EL 284-TOWER A | DATE 10-30-68

REVISIONS

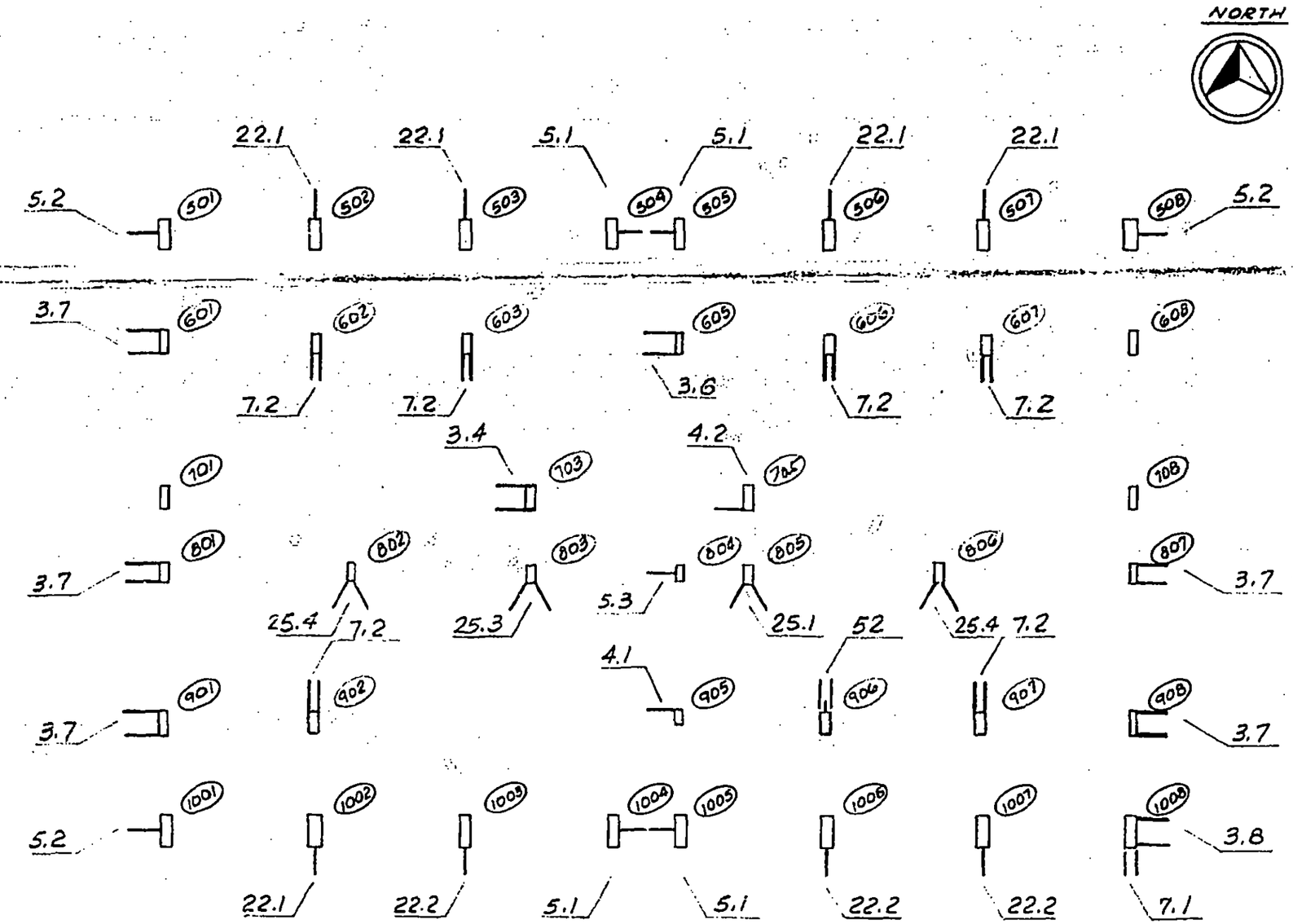

LICENSED PROFESSIONAL ENGINEER — LESLIE E. ROBERTSON — No. 34360 — UNIVERSITY OF THE STATE OF NEW YORK

DESIGNED L D'Hella

DRAWN S. Wexler

REVIEWED

18-A1-5

SKILLING, HELLE, CHRISTIANSEN, ROBERTSON — Structural & Civil Engineers

PROJECT: THE WORLD TRADE CENTER | TITLE: STRAP ANCHORS - KEY PLAN - ELEV. 284 - TOWER 'B' | DATE: 5-20-69

REVISIONS

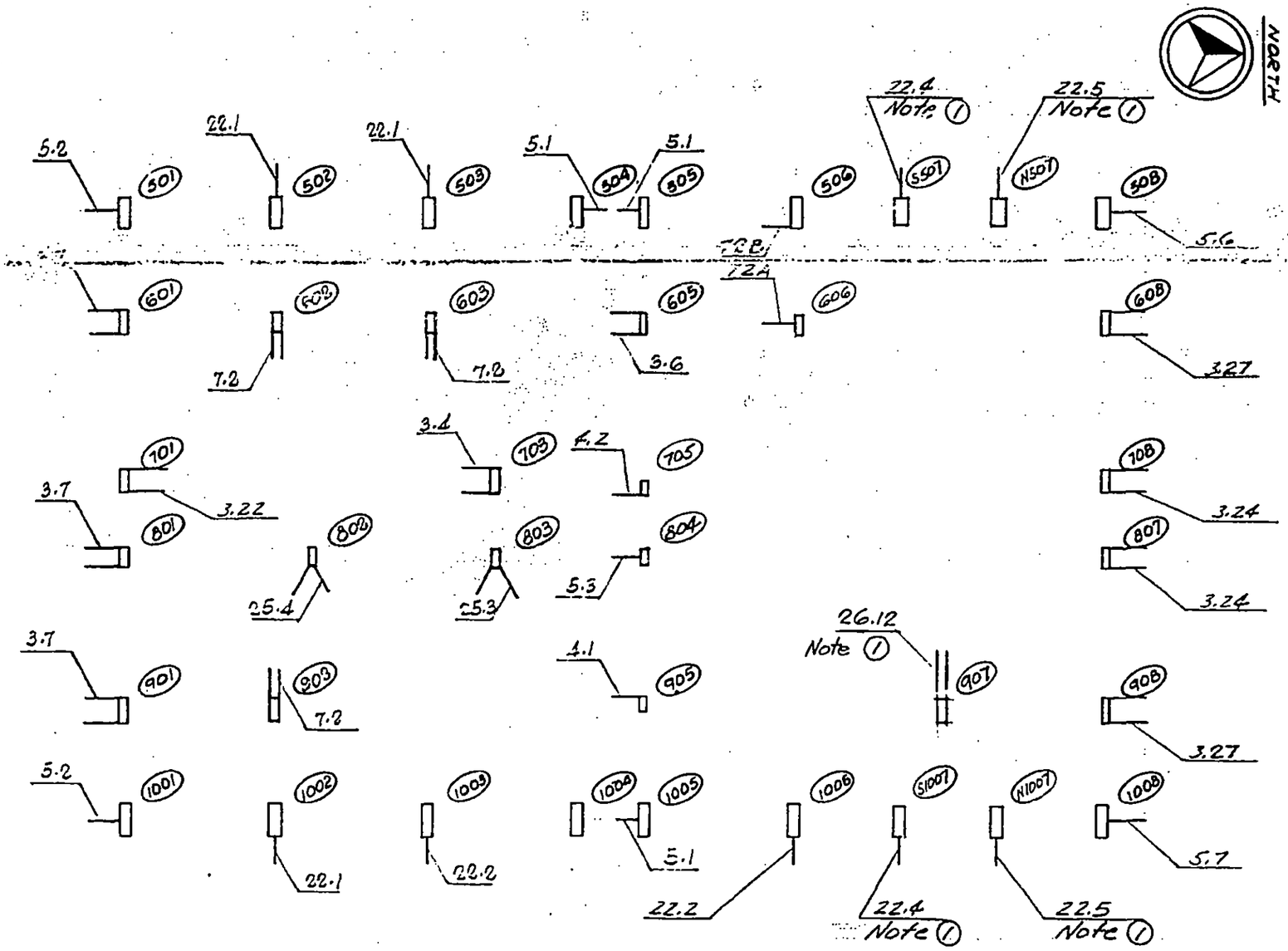

Note (1): Install after removal of existing PATH tube.

LICENSED PROFESSIONAL ENGINEER — LESLIE E. ROBERTSON — No. 34360 — UNIVERSITY OF THE STATE OF NEW YORK

DESIGNED

DRAWN: J.T.M.

REVIEWED: W. Brewer

18-81-5.1

SKILLING, HELLE, CHRISTIANSEN, ROBERTSON — Structural & Civil Engineers

PROJECT: THE WORLD TRADE CENTER | TITLE: STRAP ANCHORS - KEY PLAN - EL 294 - TOWER A | DATE: 10/30/68

REVISIONS

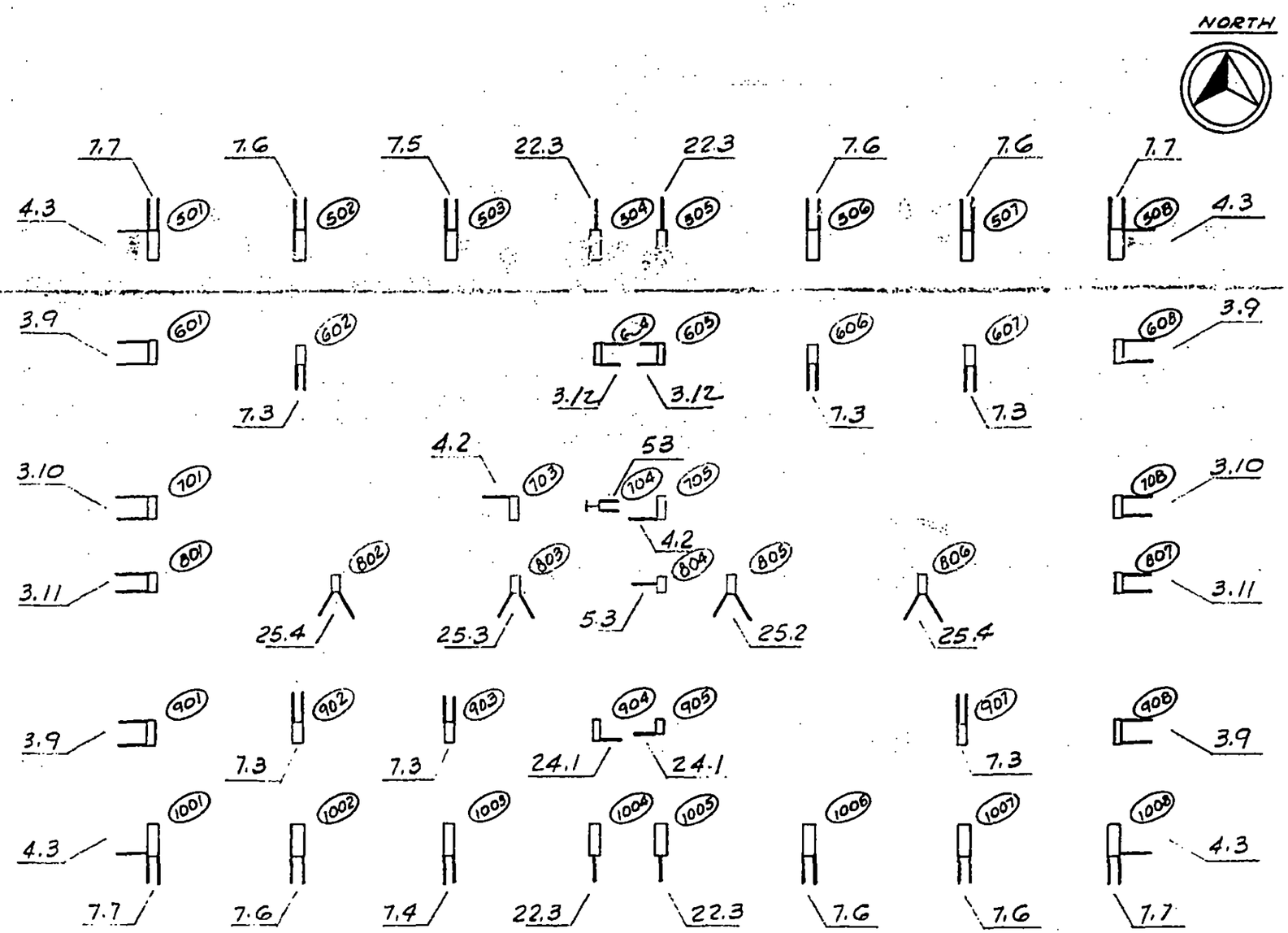

LICENSED PROFESSIONAL ENGINEER — LESLIE E. ROBERTSON — No. 34360 — UNIVERSITY OF THE STATE OF NEW YORK

DESIGNED: O'Neil

DRAWN: S. Wexler

REVIEWED:

18-A1-6

SKILLING, HELLE, CHRISTIANSEN, ROBERTSON — Structural & Civil Engineers

PROJECT THE WORLD TRADE CENTER | TITLE STRAP ANCHORS - KEY PLAN - ELEV. 294 - TOWER 'B' | DATE 5-20-69

REVISIONS

10-1-69

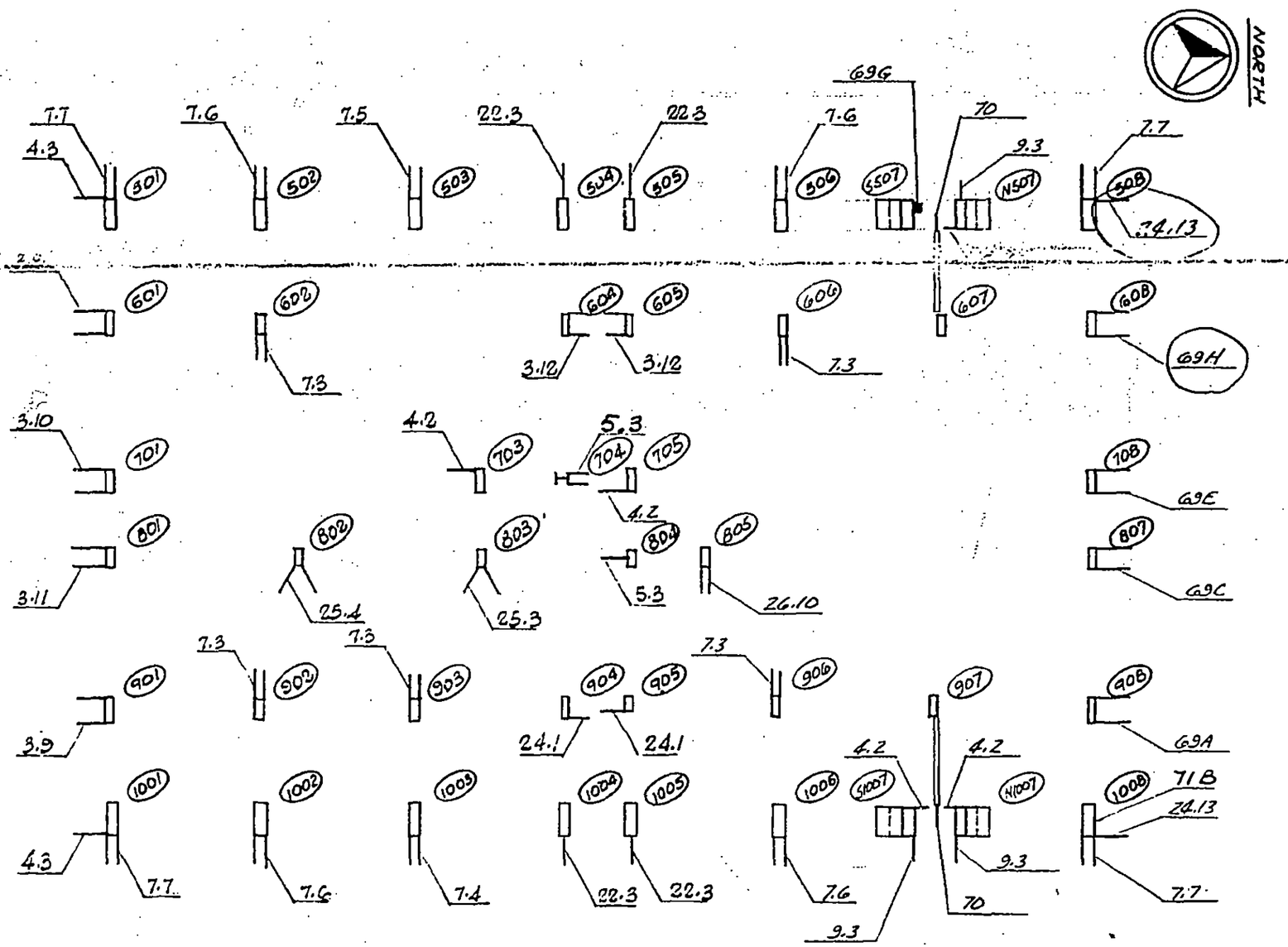

LICENSED PROFESSIONAL ENGINEER
LESLIE E. ROBERTSON
No. 34360
UNIVERSITY OF THE STATE OF NEW YORK

DESIGNED

DRAWN S.T.M.

REVIEWED W. Brewer

18-81-6.1

SKILLING, HELLE, CHRISTIANSEN, ROBERTSON Structural & Civil Engineers

PROJECT THE WORLD TRADE CENTER | TITLE ANCHOR STRAPS- KEY PLAN - FLOOR 1 - TOWER A | DATE 10-16-68

REVISIONS

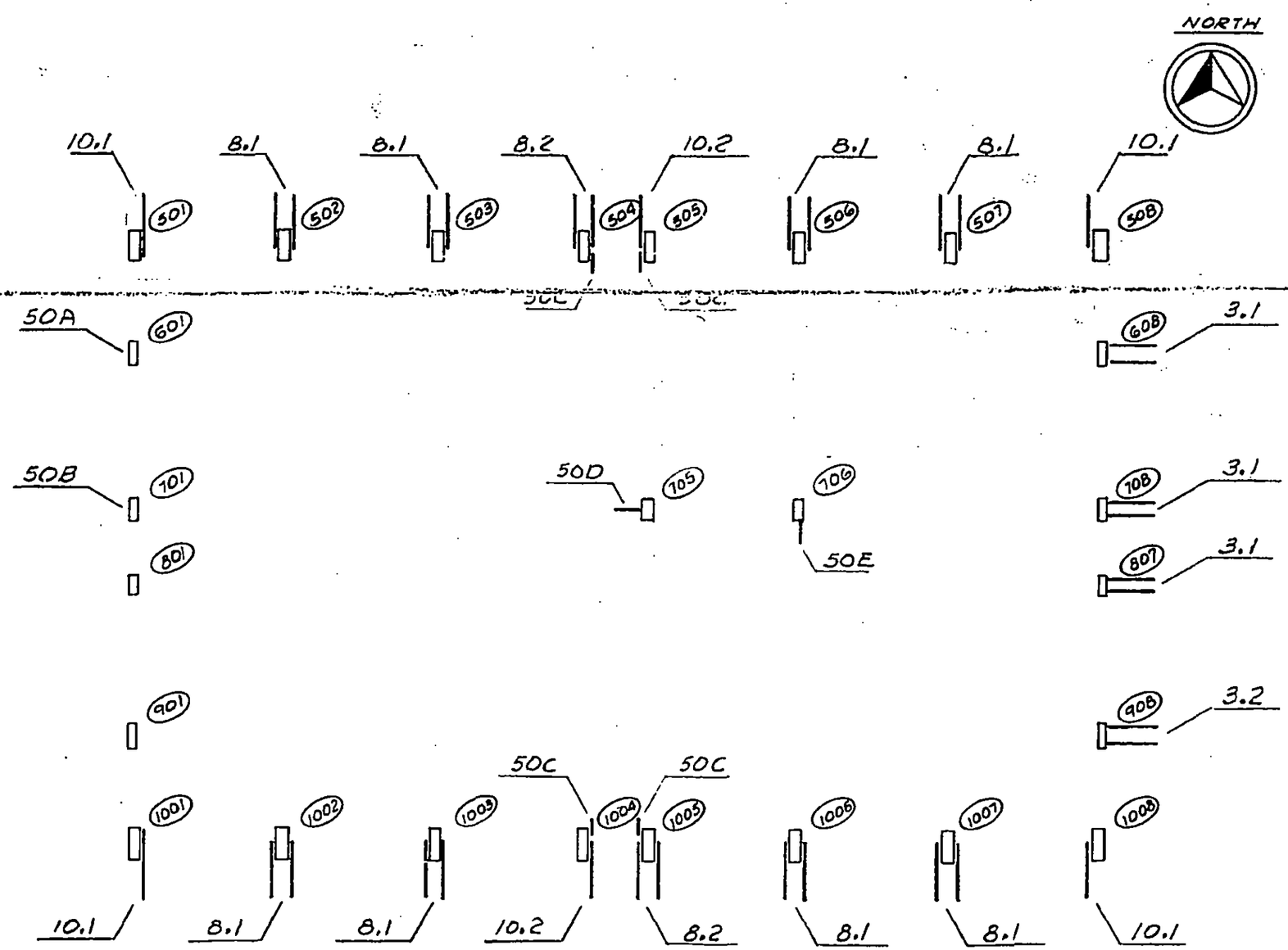

LICENSED PROFESSIONAL ENGINEER
LESLIE E. ROBERTSON
No. 34360
UNIVERSITY OF THE STATE OF NEW YORK

DESIGNED
[signature]

DRAWN
S. Wexler

REVIEWED
W. Brewer

18-A1-7

SKILLING, HELLE, CHRISTIANSEN, ROBERTSON — Structural & Civil Engineers

PROJECT THE WORLD TRADE CENTER | TITLE ANCHOR STRAPS- KEY PLAN -FLOOR 1- TOWER 2 | DATE 5-20-69

REVISIONS

10-1-69

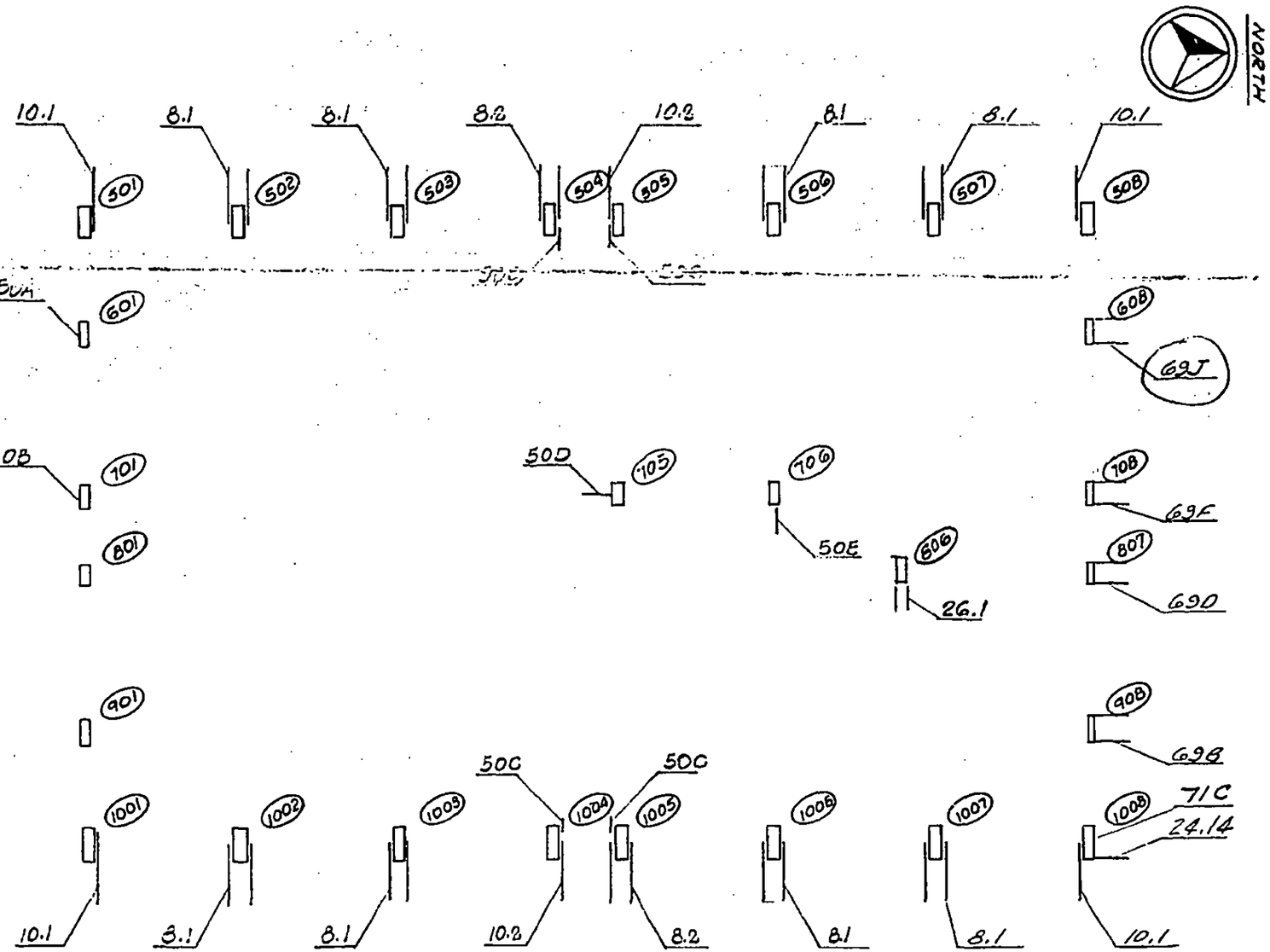

LICENSED PROFESSIONAL ENGINEER
LESLIE E. ROBERTSON
No. 34360
UNIVERSITY OF THE STATE OF NEW YORK

DESIGNED

DRAWN S.T.M.

REVIEWED W. Brewer

18-B1-7.1

SKILLING, HELLE, CHRISTIANSEN, ROBERTSON — Structural & Civil Engineers

PROJECT: THE WORLD TRADE CENTER | TITLE: ANCHOR STRAPS - KEY PLAN - FLOOR 2 - TOWER A | DATE: 12-13-68

REVISIONS

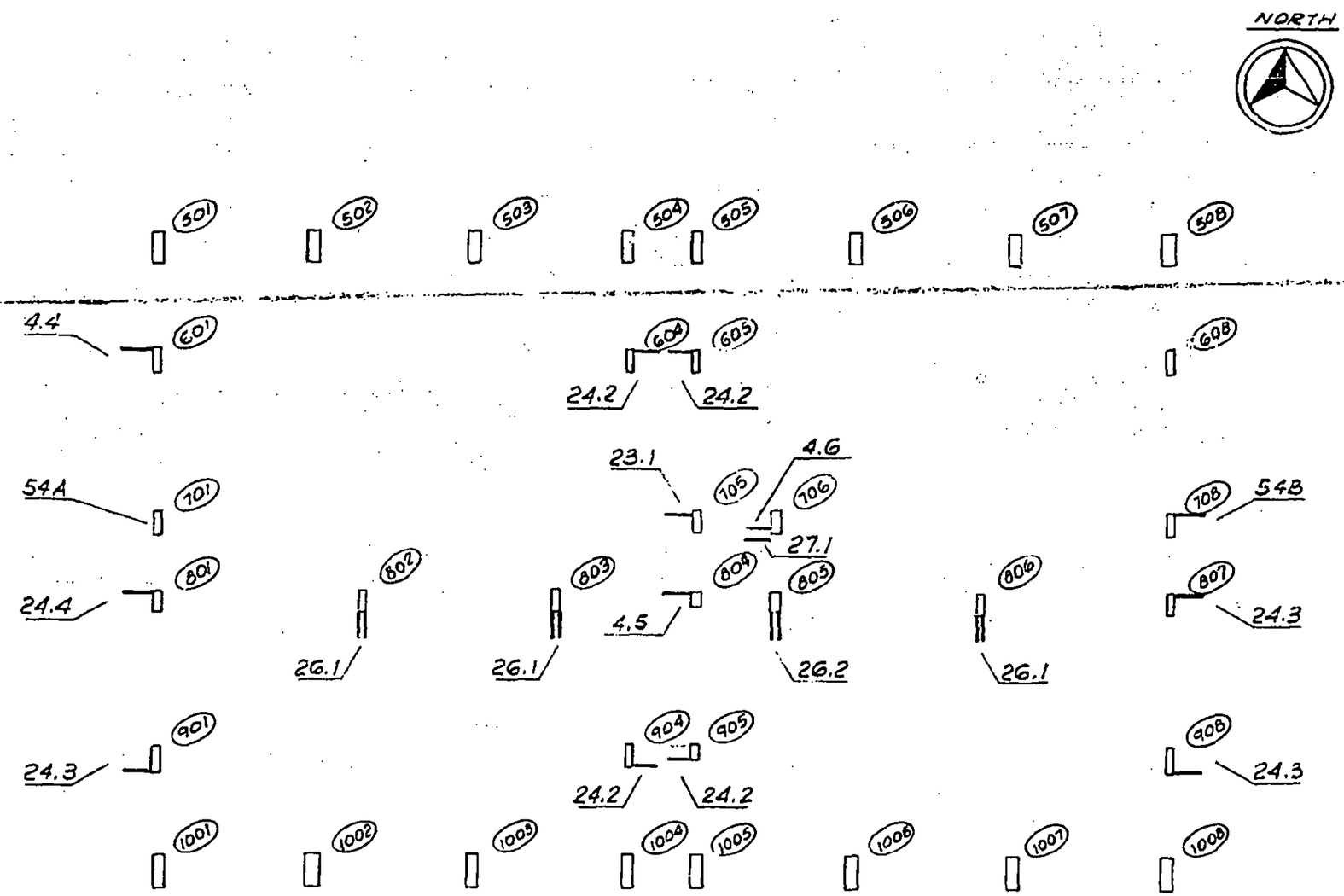

LICENSED PROFESSIONAL ENGINEER
LESLIE E. ROBERTSON
No. 34360
UNIVERSITY OF THE STATE OF NEW YORK

DESIGNED
DRAWN S. Wexler
REVIEWED

18-A1-8

SKILLING, HELLE, CHRISTIANSEN, ROBERTSON — Structural & Civil Engineers

PROJECT THE WORLD TRADE CENTER | TITLE STRAP ANCHORS-KEY PLAN-FLOOR 2-TOWER B | DATE 5-20-69

REVISIONS

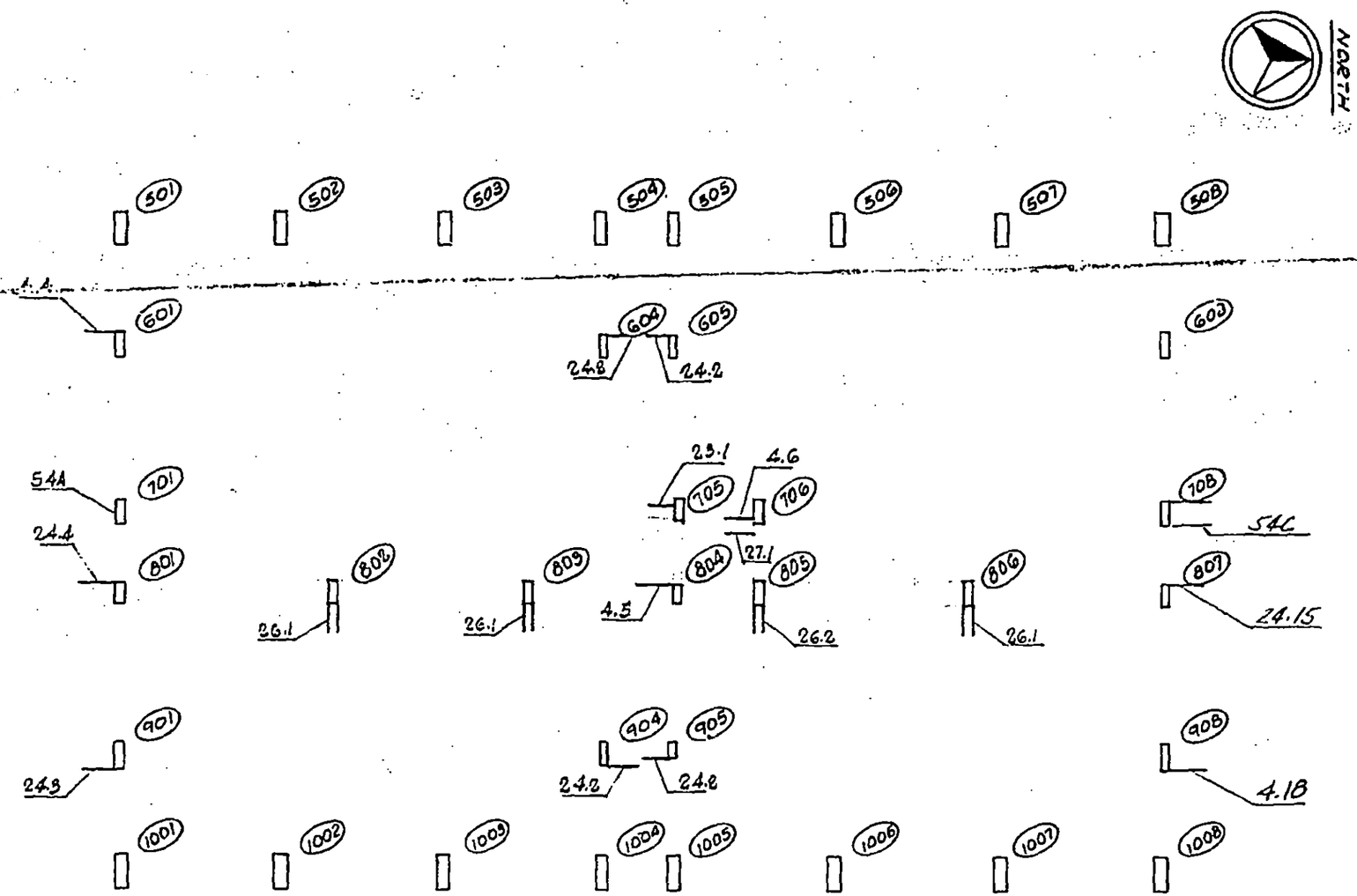

LICENSED PROFESSIONAL ENGINEER
LESLIE E. ROBERTSON
No. 34360
UNIVERSITY OF THE STATE OF NEW YORK

DESIGNED

DRAWN S.T.M.

REVIEWED W. Brewer

18-81-8.1

SKILLING, HELLE, CHRISTIANSEN, ROBERTSON — Structural & Civil Engineers

PROJECT THE WORLD TRADE CENTER | TITLE STRAP ANCHORS - KEY PLANS - FLOOR 3 | DATE 12-13-68

REVISIONS

5-20-69

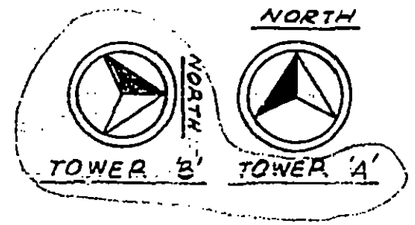

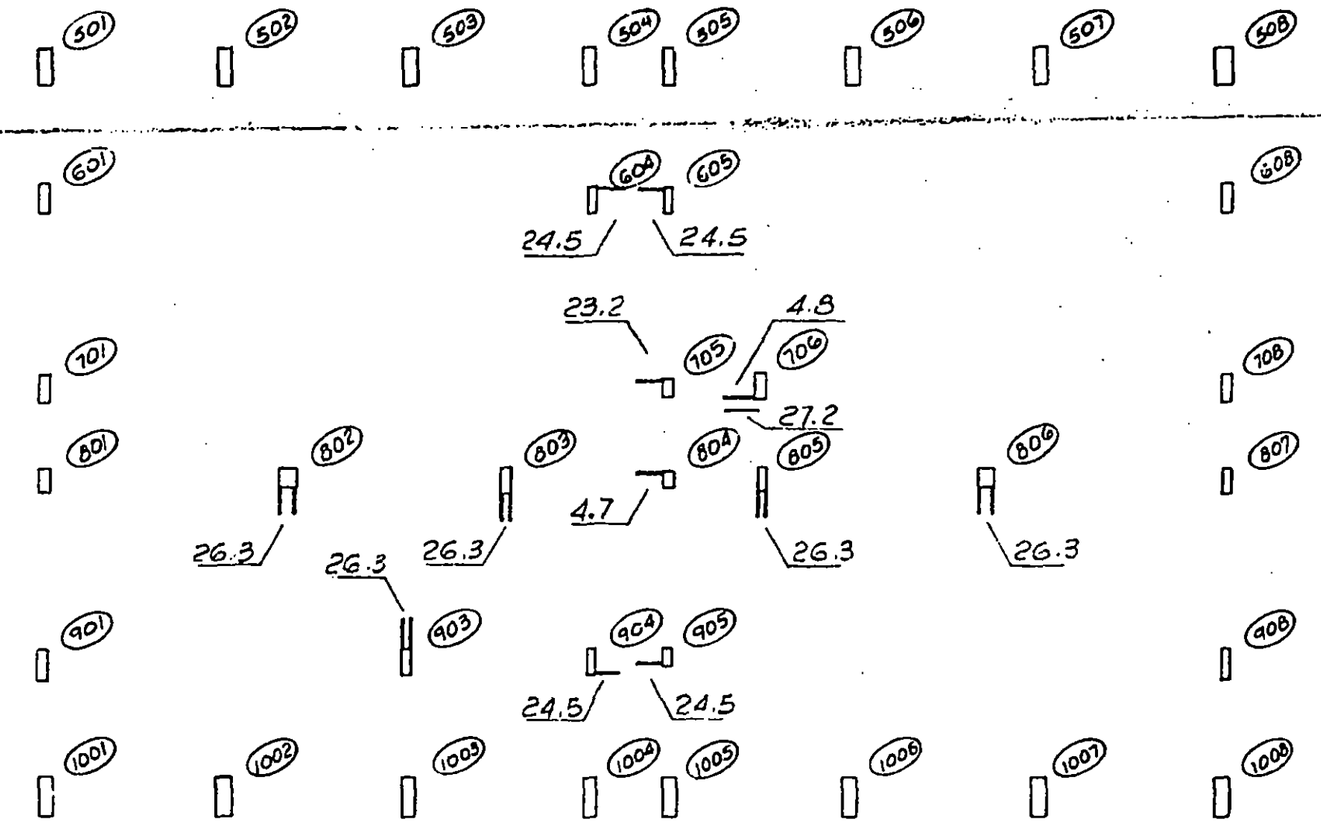

LICENSED PROFESSIONAL ENGINEER
LESLIE E. ROBERTSON
No. 34360
UNIVERSITY OF THE STATE OF NEW YORK

DESIGNED

DRAWN S. Wexler

REVIEWED W. Brewer

18-AB1-9

SKILLING, HELLE, CHRISTIANSEN, ROBERTSON — Structural & Civil Engineers

PROJECT THE WORLD TRADE CENTER | TITLE STRAP ANCHORS - KEY PLANS - FLOOR 4 | DATE 12-13-68

REVISIONS

5-20-69

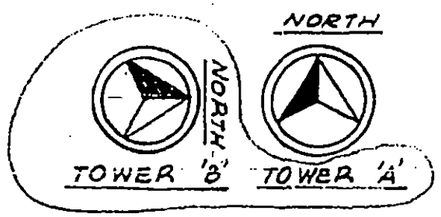

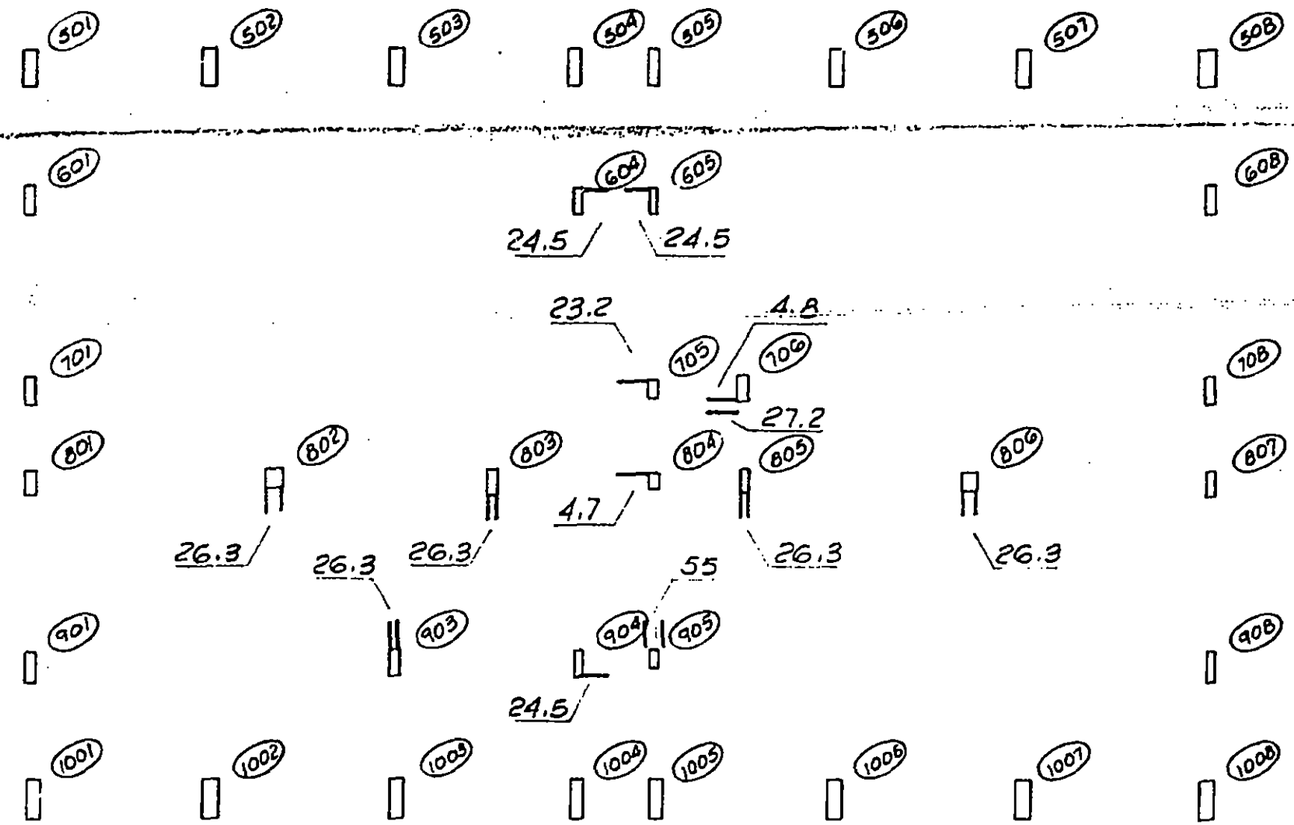

LICENSED PROFESSIONAL ENGINEER
LESLIE E. ROBERTSON
No. 34360
UNIVERSITY OF THE STATE OF NEW YORK

DESIGNED

DRAWN S. Wexler

REVIEWED W. Brewer

18 AB 1-10

SKILLING, HELLE, CHRISTIANSEN, ROBERTSON — Structural & Civil Engineers

PROJECT THE WORLD TRADE CENTER | TITLE STRAP ANCHORS - KEY PLANS - FLOOR 5 | DATE 12-13-68

REVISIONS

5-20-69

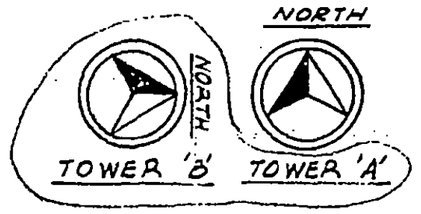

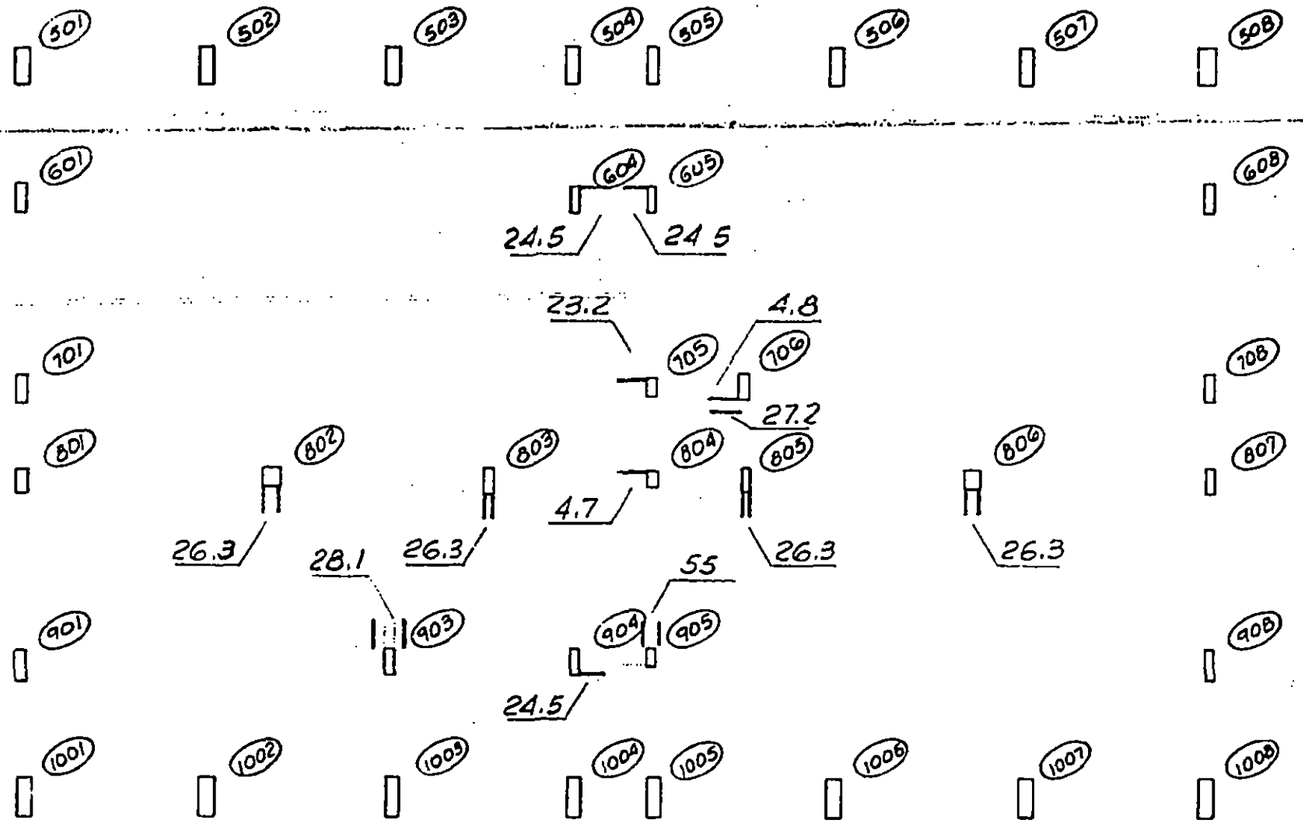

LICENSED PROFESSIONAL ENGINEER
LESLIE E. ROBERTSON
No. 34360
UNIVERSITY OF THE STATE OF NEW YORK

DESIGNED
L. E. Robertson

DRAWN
S. Wexler

REVIEWED
L. E. Robertson

18-AB1-11

SKILLING, HELLE, CHRISTIANSEN, ROBERTSON — Structural & Civil Engineers

PROJECT THE WORLD TRADE CENTER | TITLE STRAP ANCHORS - KEY PLANS - FLOOR 6 | DATE 12-13-68

REVISIONS

5-20-69

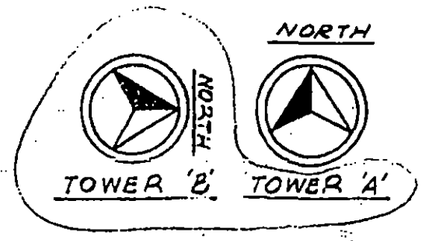

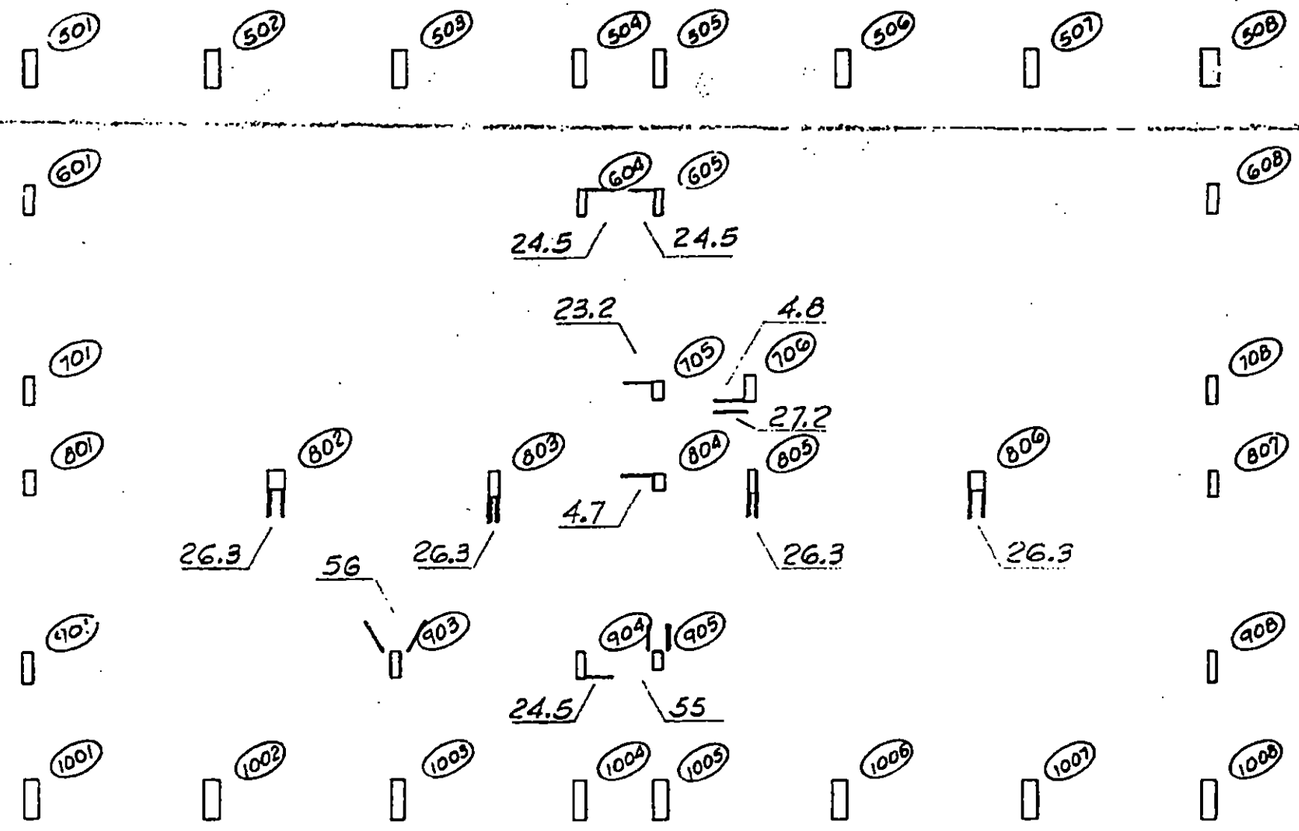

LICENSED PROFESSIONAL ENGINEER
LESLIE E. ROBERTSON
No. 34360
UNIVERSITY OF THE STATE OF NEW YORK

DESIGNED L. O'Connell

DRAWN S. Wexler

REVIEWED W. Brewer

18-AB1-12

SKILLING, HELLE, CHRISTIANSEN, ROBERTSON — Structural & Civil Engineers

PROJECT THE WORLD TRADE CENTER | TITLE ANCHOR STRAPS - KEY PLAN - FLOOR 7 - TOWER A | DATE 12-13-68

REVISIONS

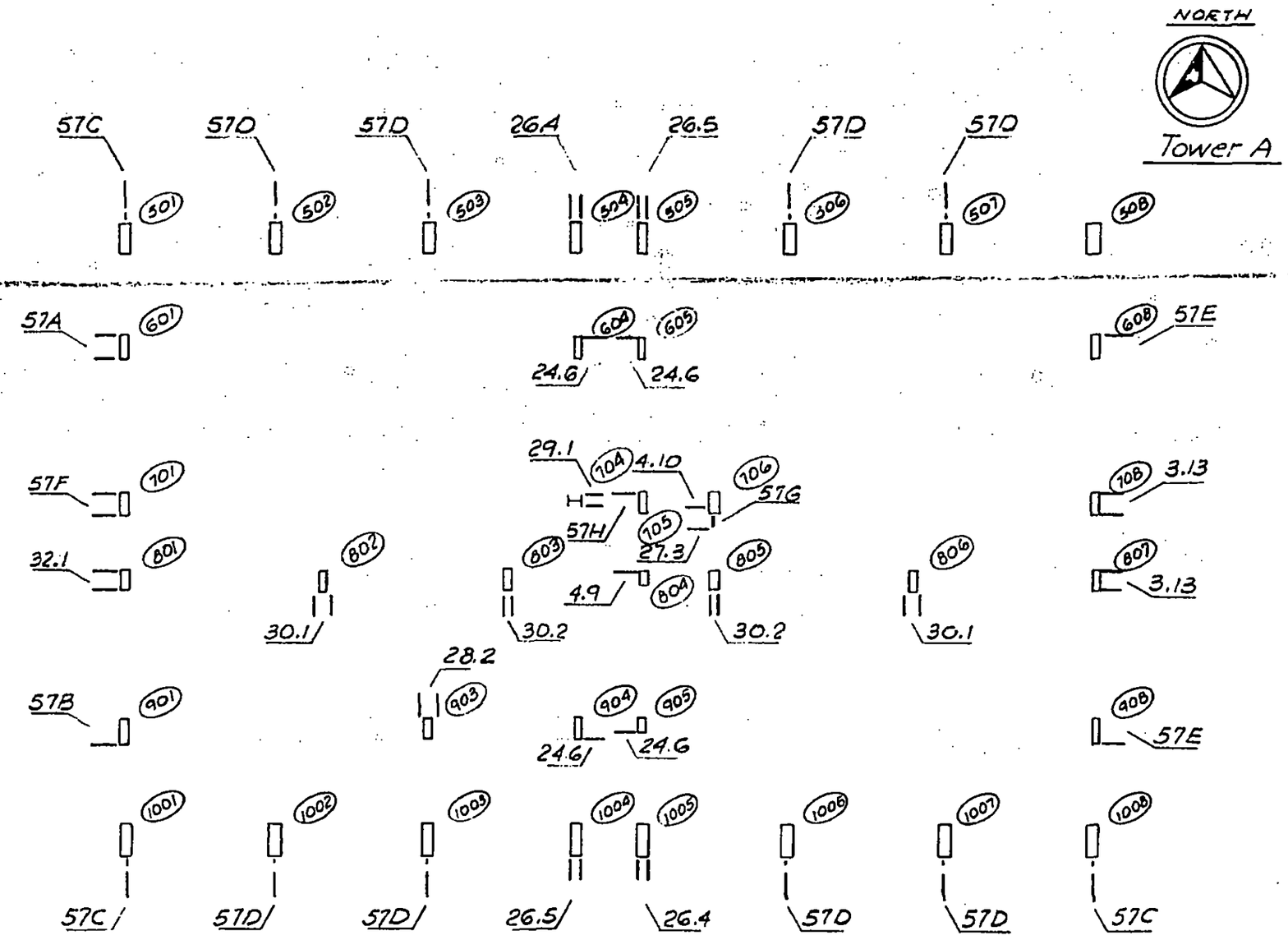

LICENSED PROFESSIONAL ENGINEER
LESLIE E. ROBERTSON
No. 34360
UNIVERSITY OF THE STATE OF NEW YORK

DESIGNED L. Robertson

DRAWN S. Wexler

REVIEWED

18-A1-13

SKILLING, HELLE, CHRISTIANSEN, ROBERTSON — Structural & Civil Engineers

PROJECT THE WORLD TRADE CENTER | TITLE ANCHOR STRAPS - KEY PLAN - FLOOR 7 - TOWER 8 | DATE 10-1-69

REVISIONS

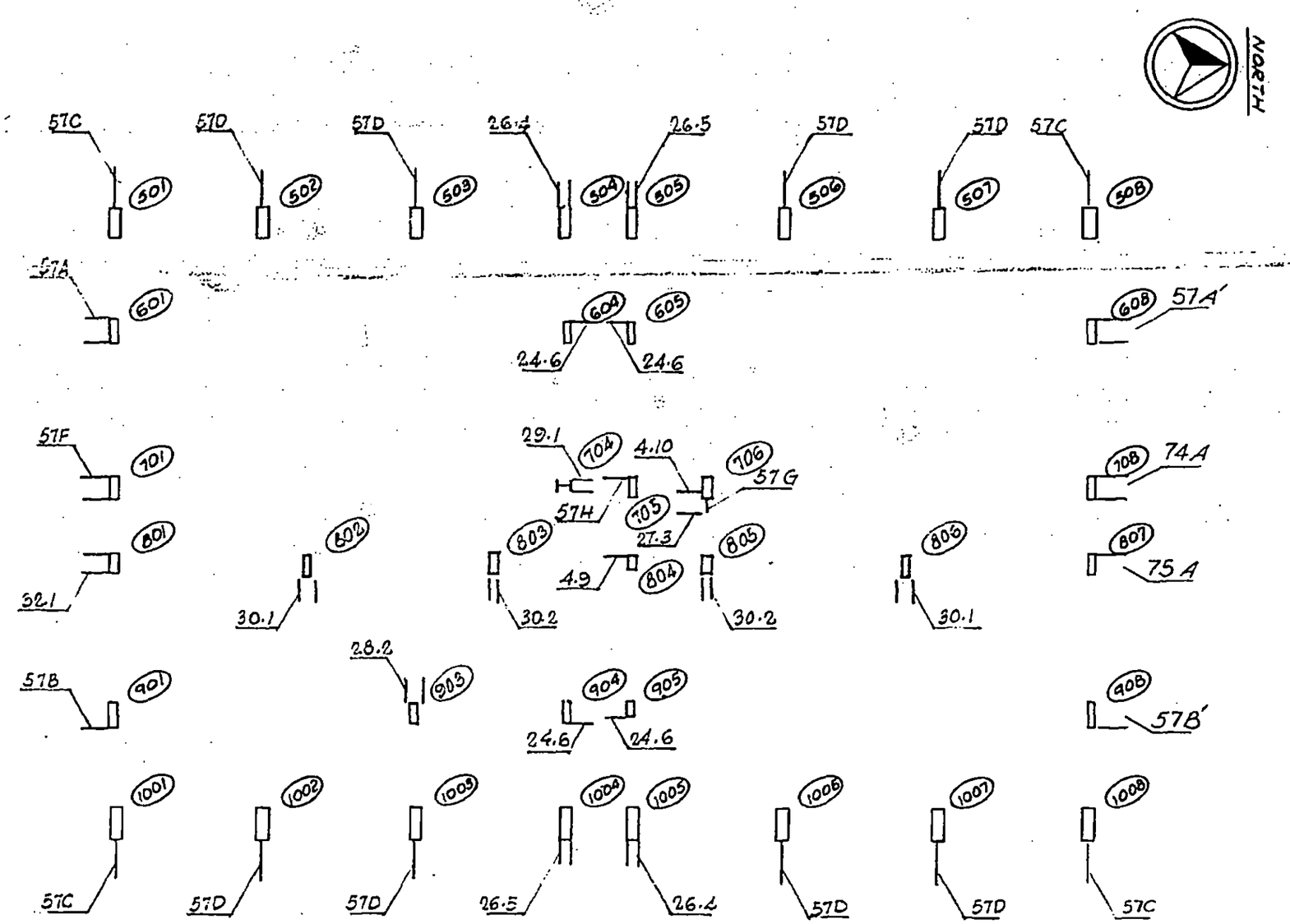

DESIGNED

DRAWN S.T.M.

REVIEWED

18-B1-13.1

SKILLING, HELLE, CHRISTIANSEN, ROBERTSON — Structural & Civil Engineers

PROJECT THE WORLD TRADE CENTER | TITLE STRAP ANCHORS - KEY PLAN - FLOOR 9 - TOWER A | DATE 12-13-68

REVISIONS

NORTH

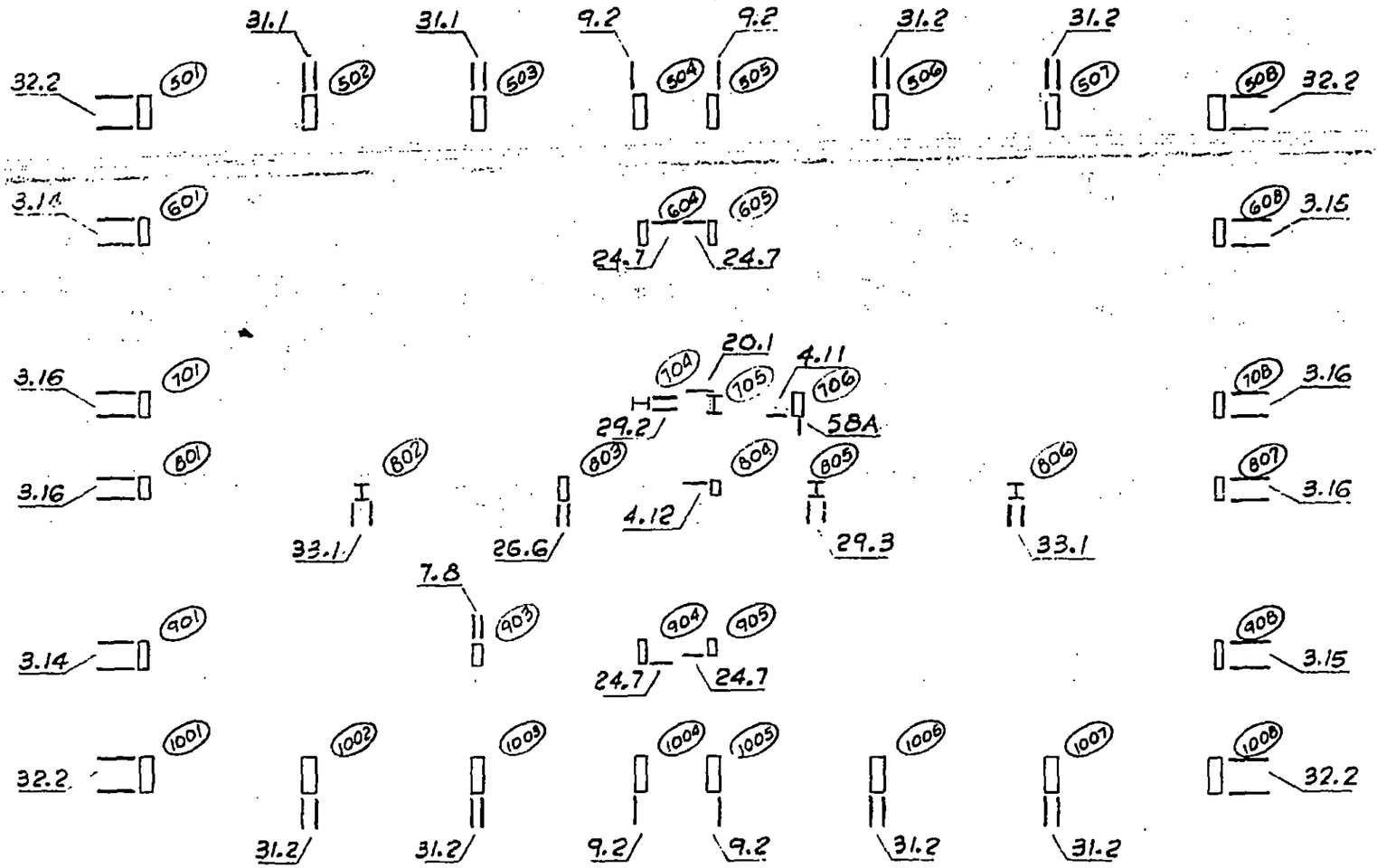

LICENSED PROFESSIONAL ENGINEER — LESLIE E. ROBERTSON — No. 34360 — UNIVERSITY OF THE STATE OF NEW YORK

DESIGNED

DRAWN S. Wexler

REVIEWED

18-A1-14

SKILLING, HELLE, CHRISTIANSEN, ROBERTSON — Structural & Civil Engineers

PROJECT THE WORLD TRADE CENTER | TITLE STRAP ANCHORS - KEY PLAN - FLOOR 9 - TOWER 2 | DATE 10-1-69

REVISIONS

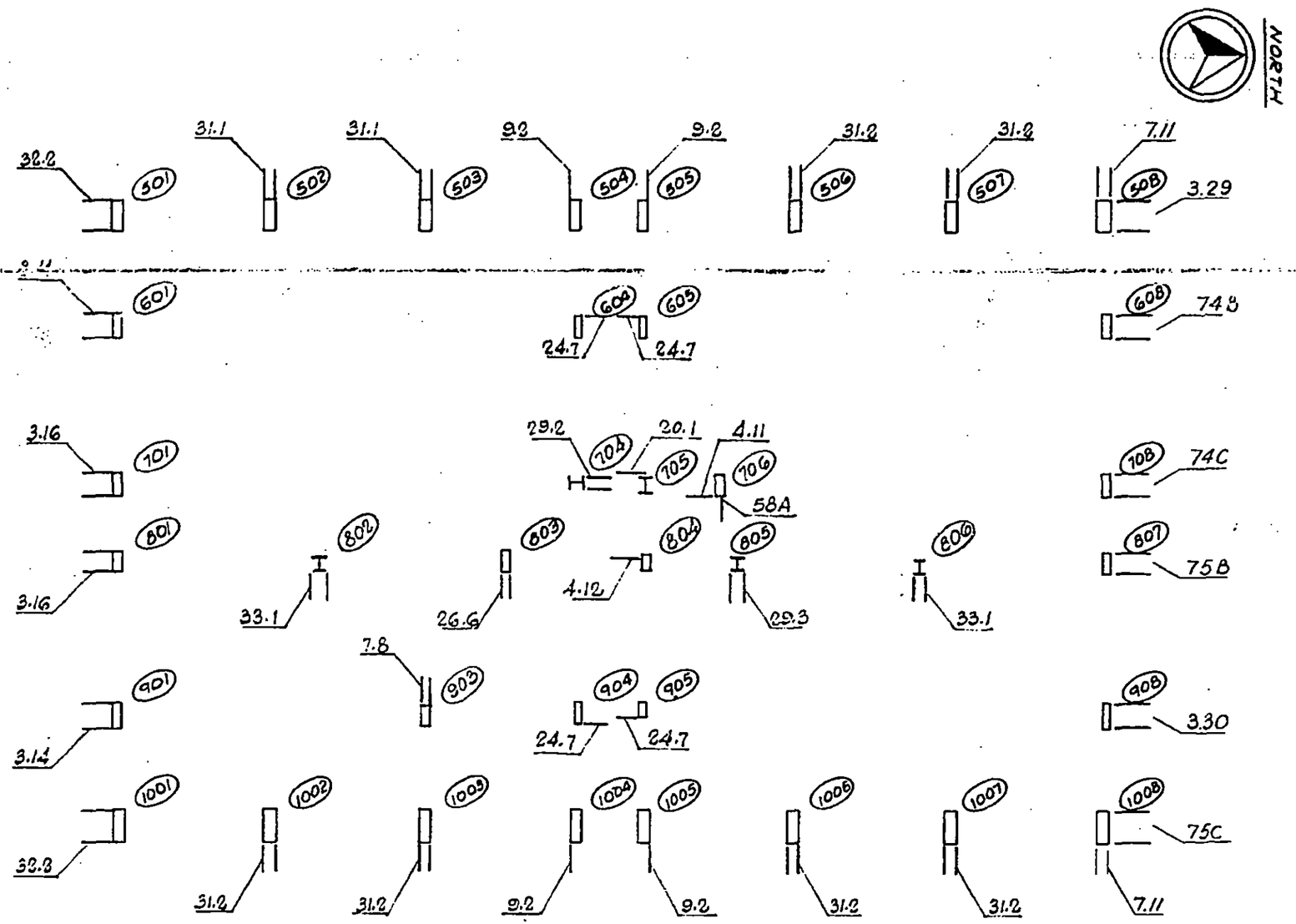

DESIGNED

DRAWN J.T.M.

REVIEWED

78-81-14.1

SKILLING, HELLE, CHRISTIANSEN, ROBERTSON — Structural & Civil Engineers

PROJECT THE WORLD TRADE CENTER | TITLE STRAP ANCHORS - KEY PLANS - FLOORS 10, 11 | DATE 2-7-69

REVISIONS

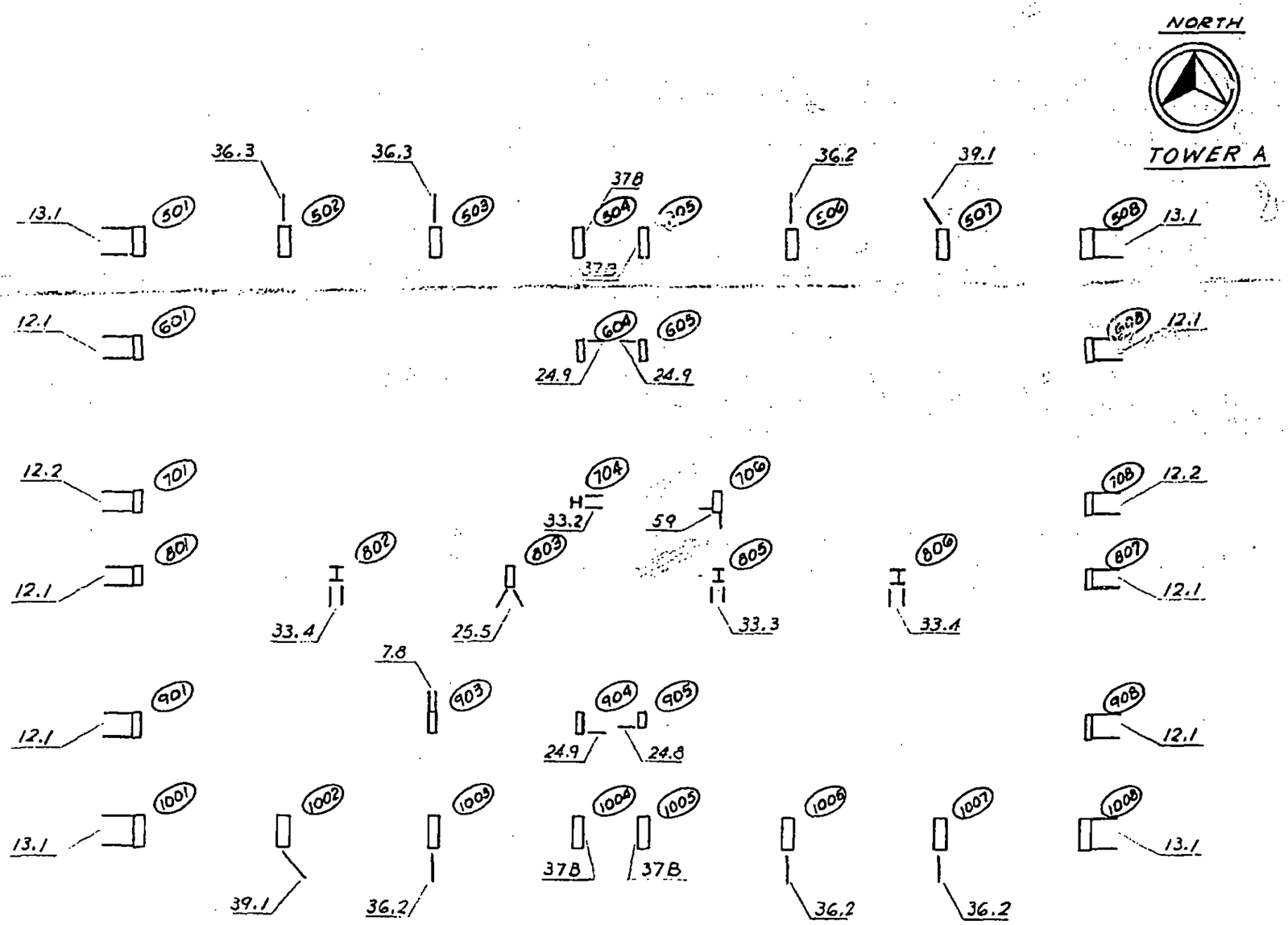

LICENSED PROFESSIONAL ENGINEER
LESLIE E. ROBERTSON
No. 34360
UNIVERSITY OF THE STATE OF NEW YORK

DESIGNED
[signature]

DRAWN
F. Smith

REVIEWED
W. Brewer

18 - A1 - 15.1

SKILLING, HELLE, CHRISTIANSEN, ROBERTSON — Structural & Civil Engineers

PROJECT: THE WORLD TRADE CENTER | TITLE: STRAP ANCHORS - KEY PLANS - FLOOR 10 | DATE: 10-1-69

REVISIONS

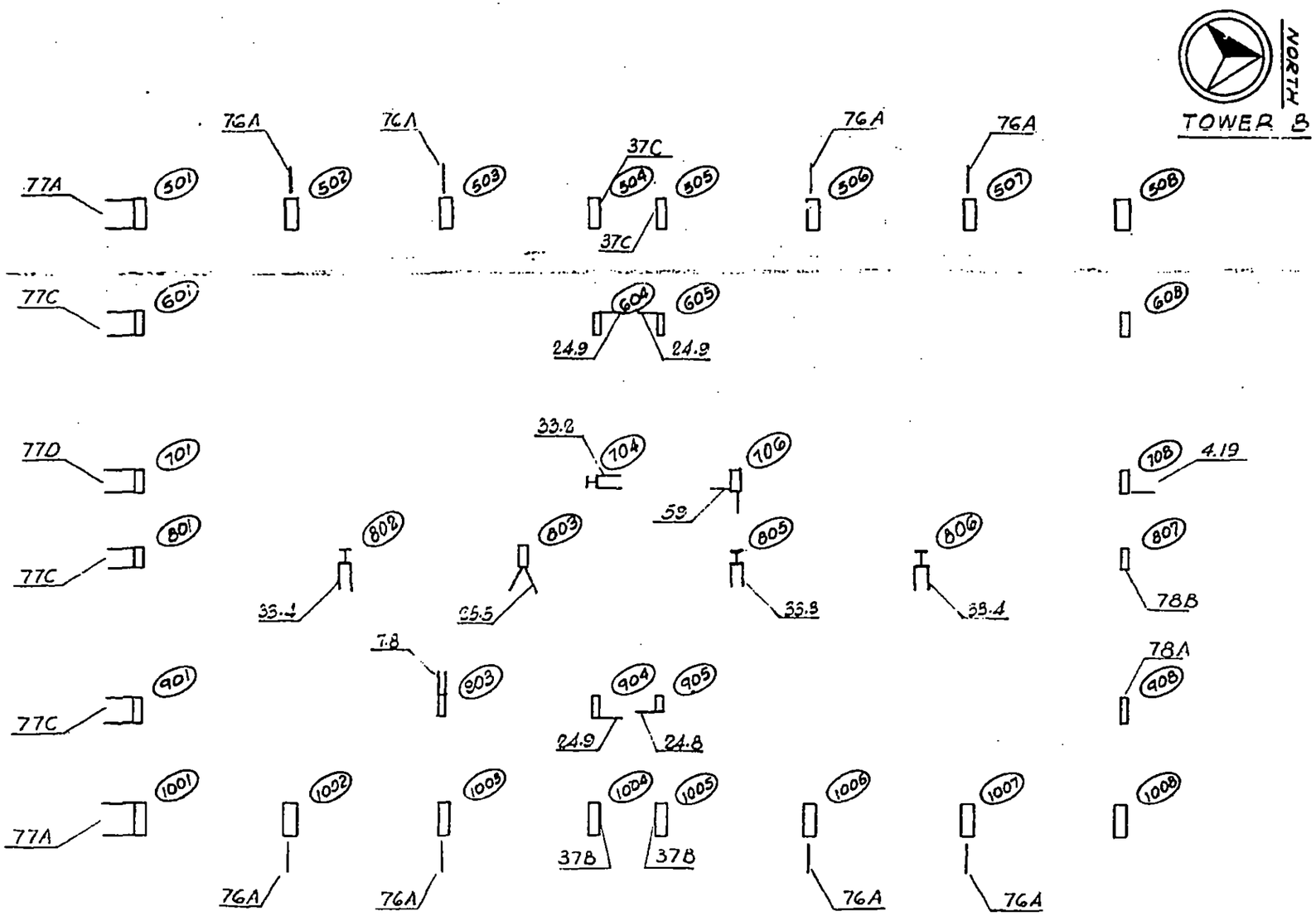

DESIGNED

DRAWN
S.T.M.

REVIEWED

18-31-15.2

SKILLING, HELLE, CHRISTIANSEN, ROBERTSON — Structural & Civil Engineers

PROJECT THE WORLD TRADE CENTER | TITLE STRAP ANCHORS - KEY PLANS - FLOOR 11 | DATE 10-1-69

REVISIONS

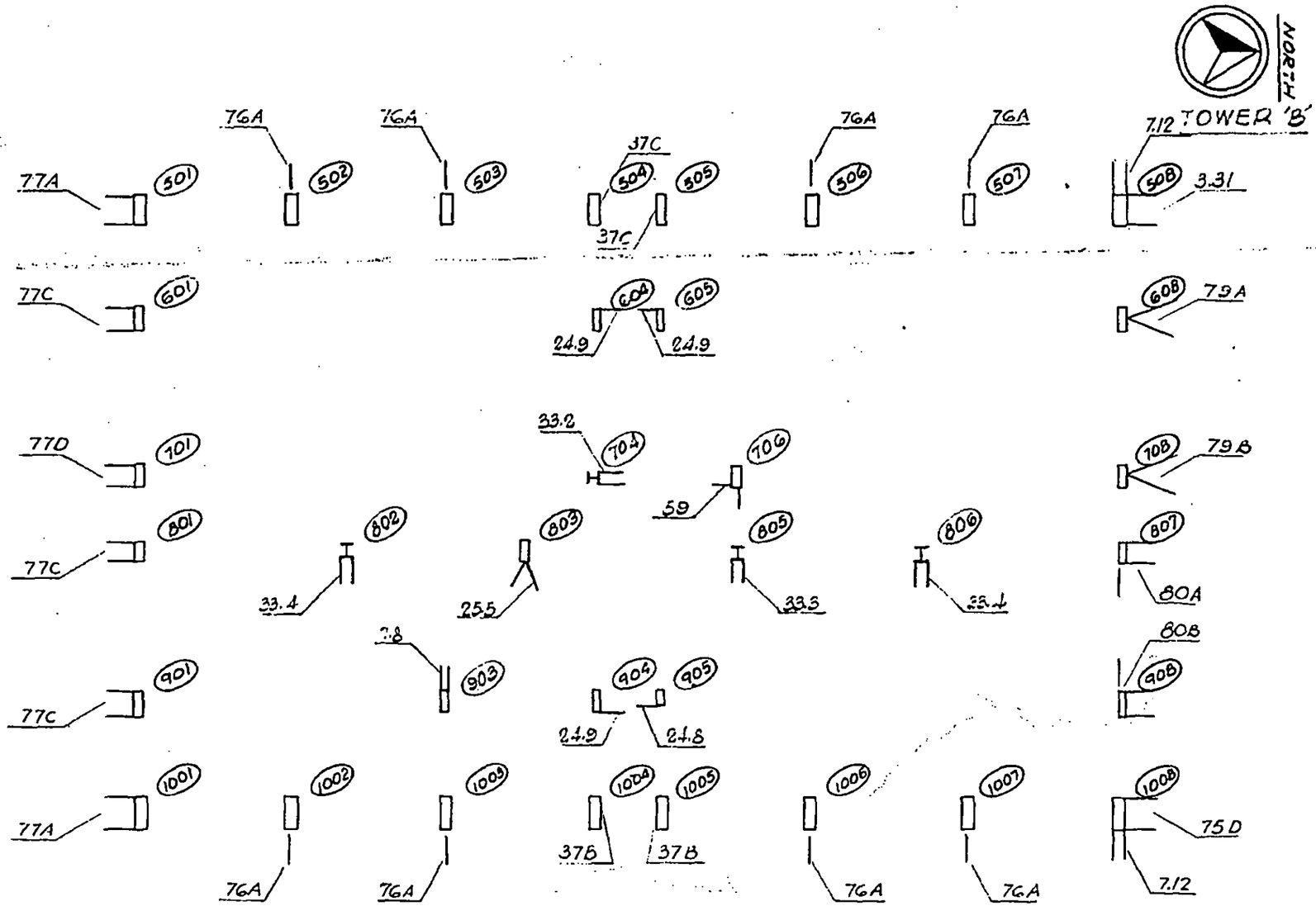

DESIGNED

DRAWN
S.T.M.

REVIEWED

18-51-15.3

SKILLING, HELLE, CHRISTIANSEN, ROBERTSON — Structural & Civil Engineers

PROJECT THE WORLD TRADE CENTER | TITLE STRAP ANCHORS - KEY PLANS - FLR 12-17 TOWER A - FLR 14-17 TOWER B | DATE 2-7-69

REVISIONS

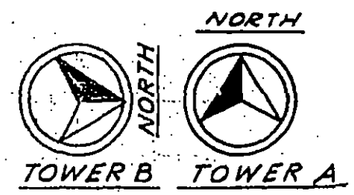

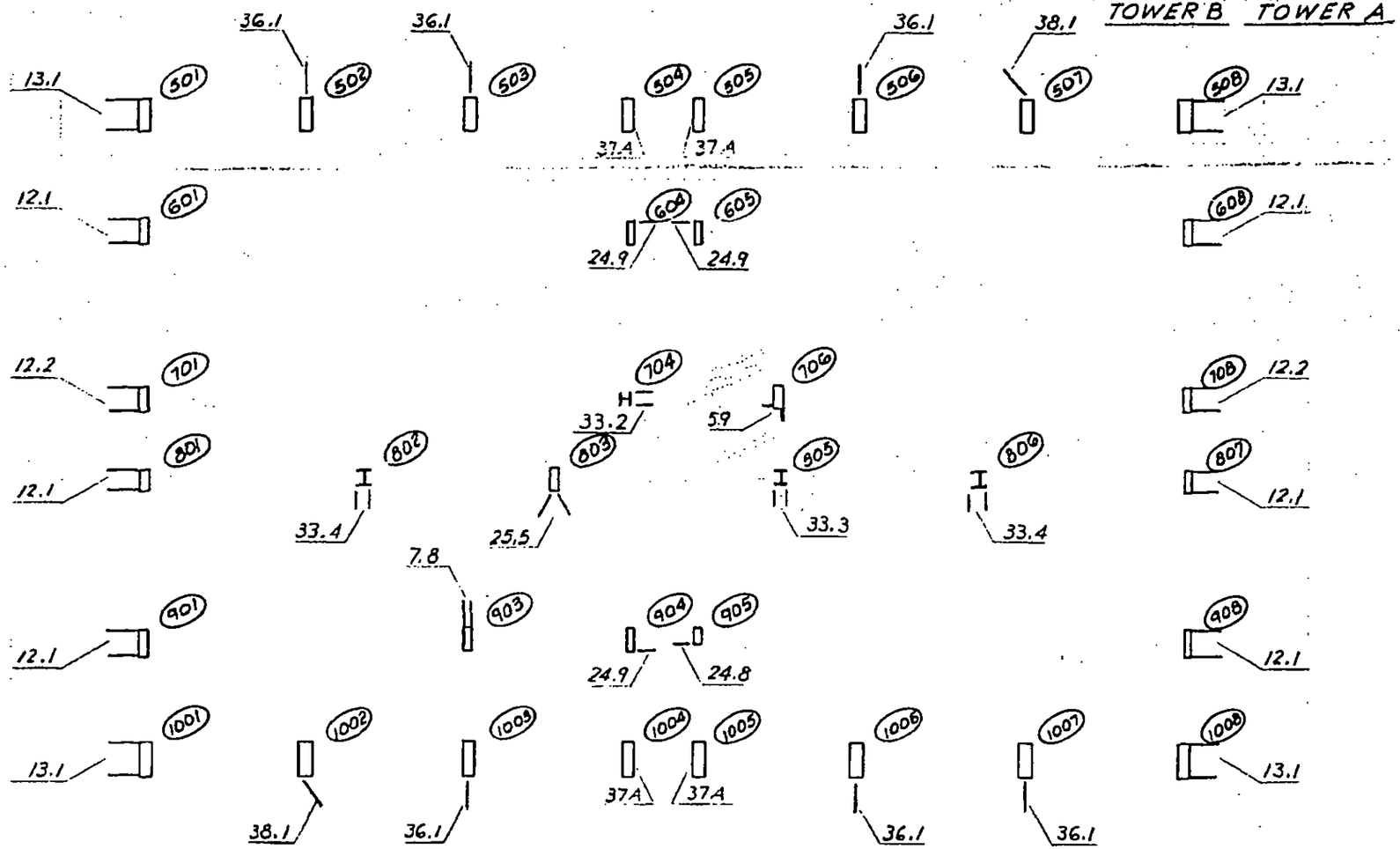

LICENSED PROFESSIONAL ENGINEER
LESLIE E. ROBERTSON
No. 34360
UNIVERSITY OF THE STATE OF NEW YORK

DESIGNED J. D'Mello
DRAWN F. Smith
REVIEWED W. Brewer

18-AB1-16.1

SKILLING, HELLE, CHRISTIANSEN, ROBERTSON — Structural & Civil Engineers

PROJECT THE WORLD TRADE CENTER | TITLE STRAP ANCHORS - KEY PLANS - FLOOR 12 | DATE 10-1-69

REVISIONS

NORTH

TOWER 'B'

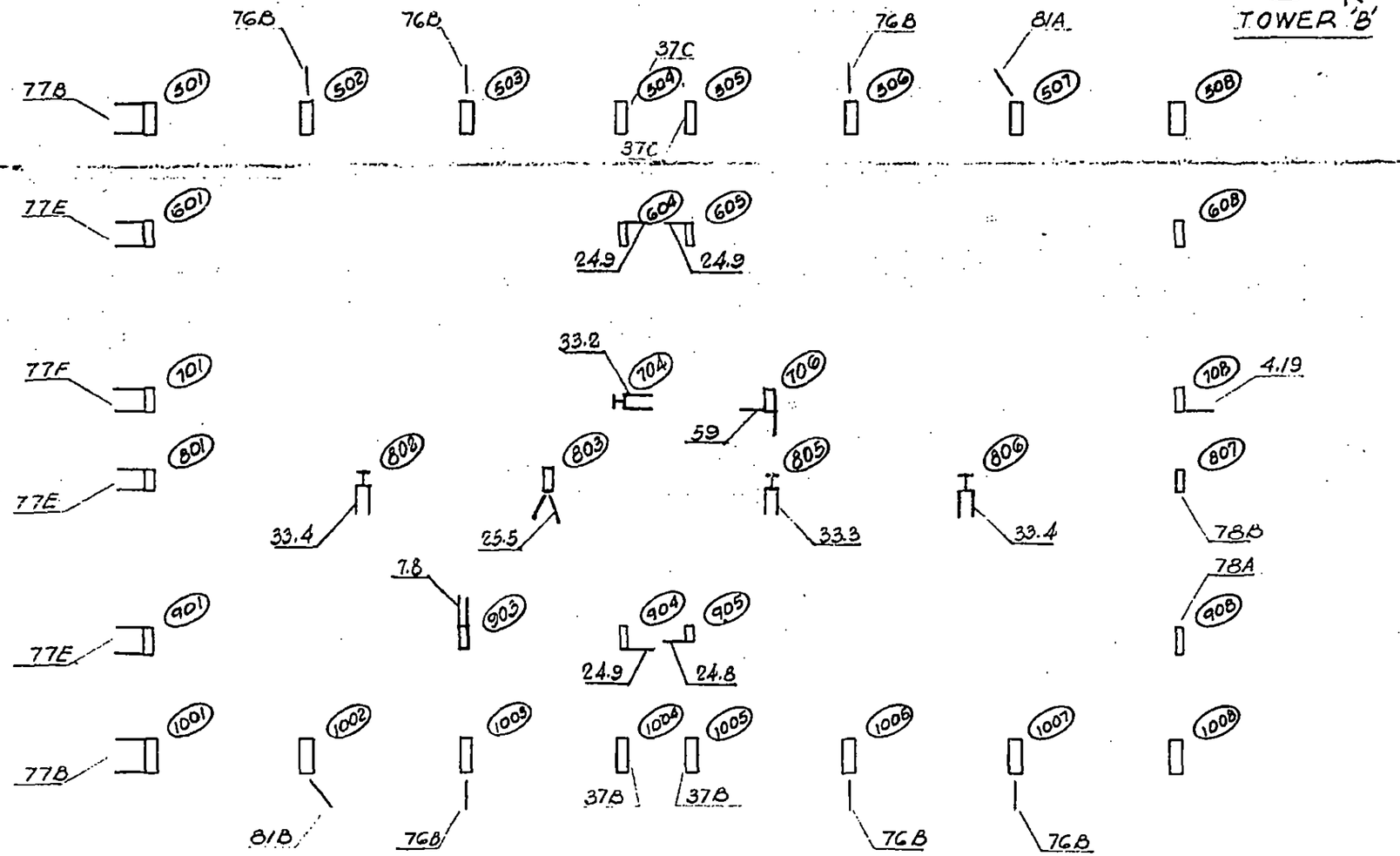

DESIGNED

DRAWN S.T.M.

REVIEWED

18-81-16.2

SKILLING, HELLE, CHRISTIANSEN, ROBERTSON — Structural & Civil Engineers

PROJECT THE WORLD TRADE CENTER | TITLE STRAP ANCHORS - KEY PLANS - FLOOR 13 | DATE 10-1-69

REVISIONS

NORTH

TOWER 'B'

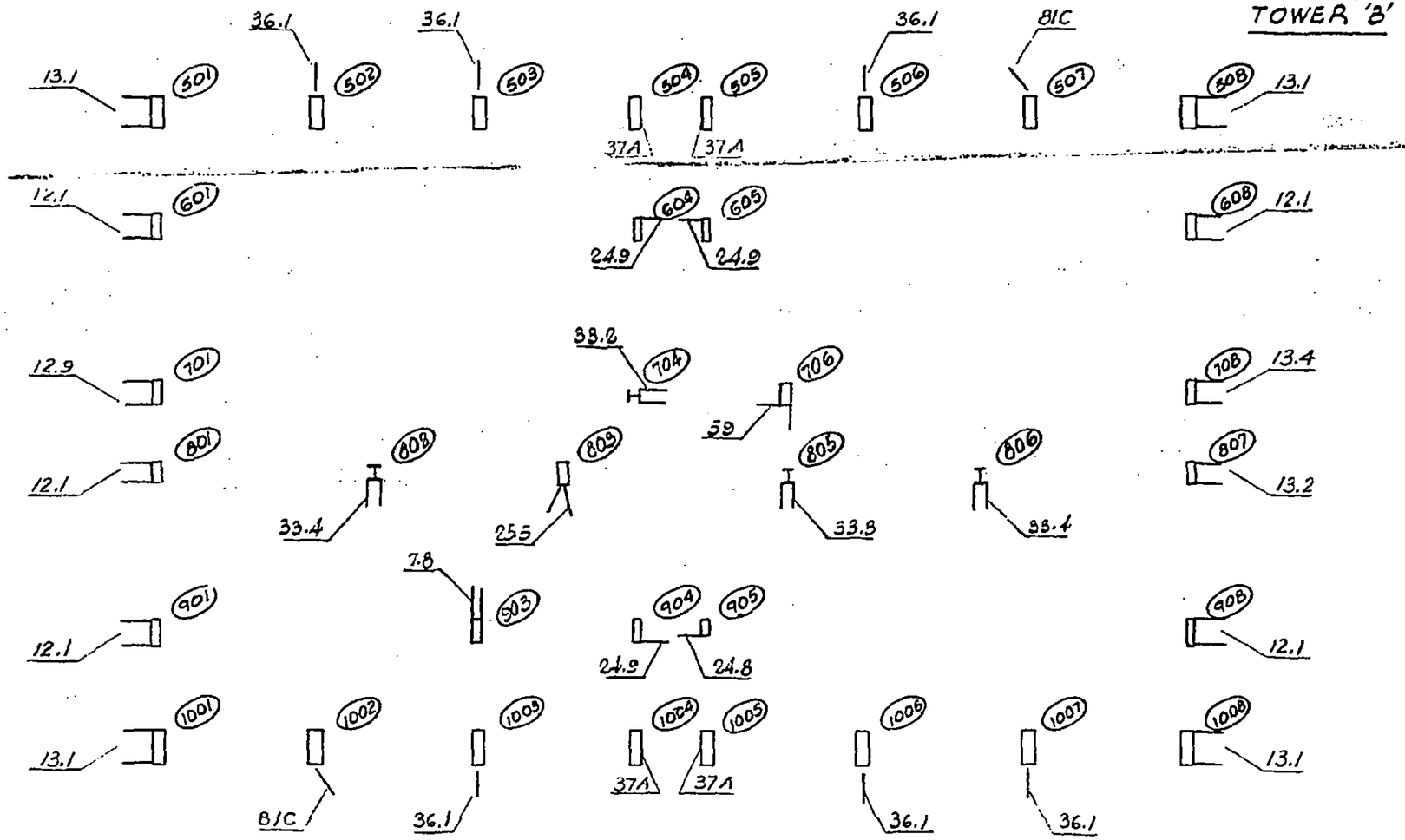

DESIGNED

DRAWN S.T.M.

REVIEWED

18-81-16.3

SKILLING, HELLE, CHRISTIANSEN, ROBERTSON — Structural & Civil Engineers

PROJECT THE WORLD TRADE CENTER | TITLE STRAP ANCHORS - KEY PLANS - FLOOR 18 | DATE 2-7-69

REVISIONS

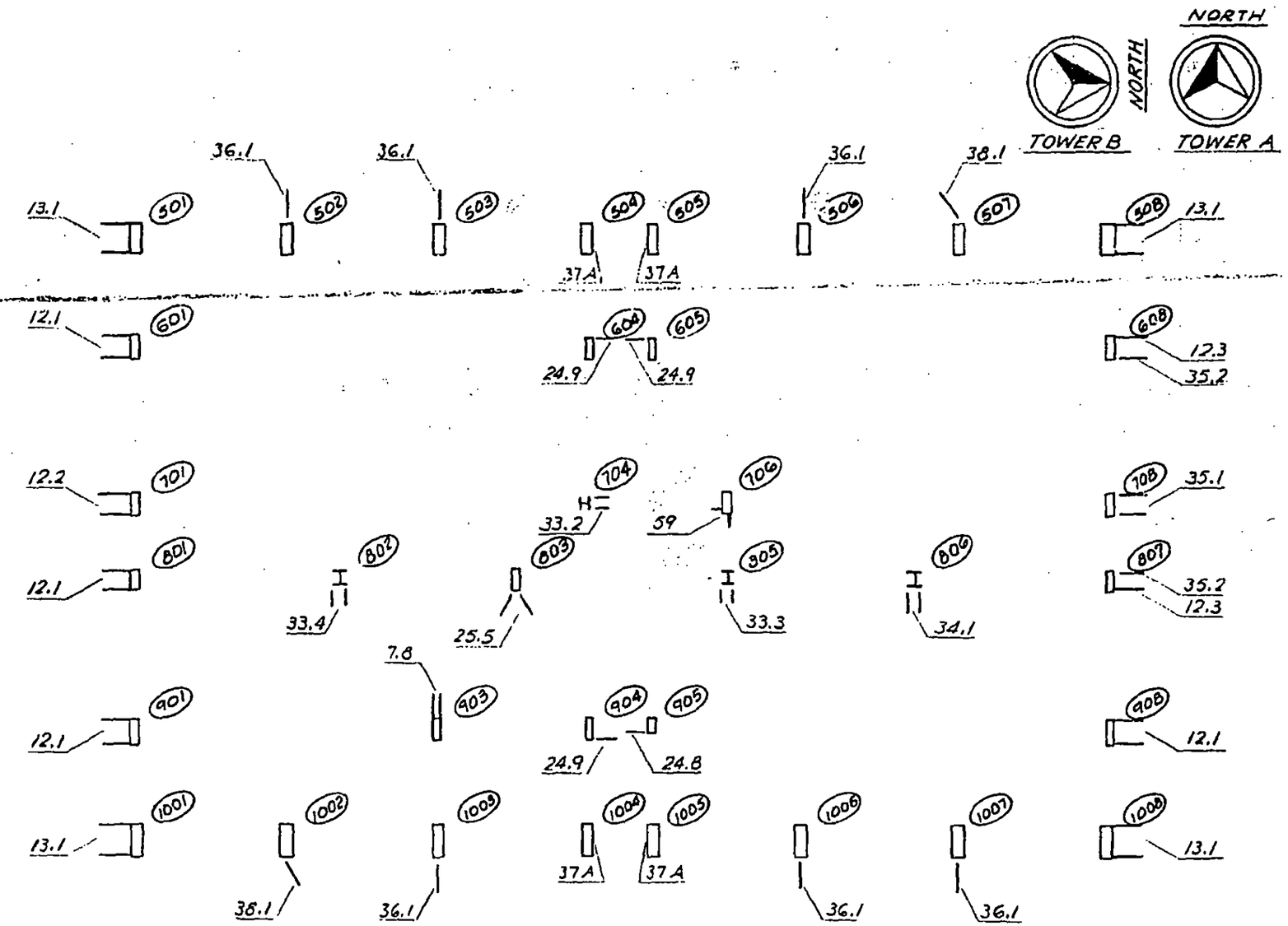

LICENSED PROFESSIONAL ENGINEER
LESLIE E. ROBERTSON
No. 34360
UNIVERSITY OF THE STATE OF NEW YORK

DESIGNED L. Robertson

DRAWN F. Smith

REVIEWED W. Brewer

18-AB1-17

SKILLING, HELLE, CHRISTIANSEN, ROBERTSON — Structural & Civil Engineers

PROJECT: THE WORLD TRADE CENTER | TITLE: STRAP ANCHORS - KEY PLANS - FLOORS 19 - 26 | DATE: 2-7-69

REVISIONS

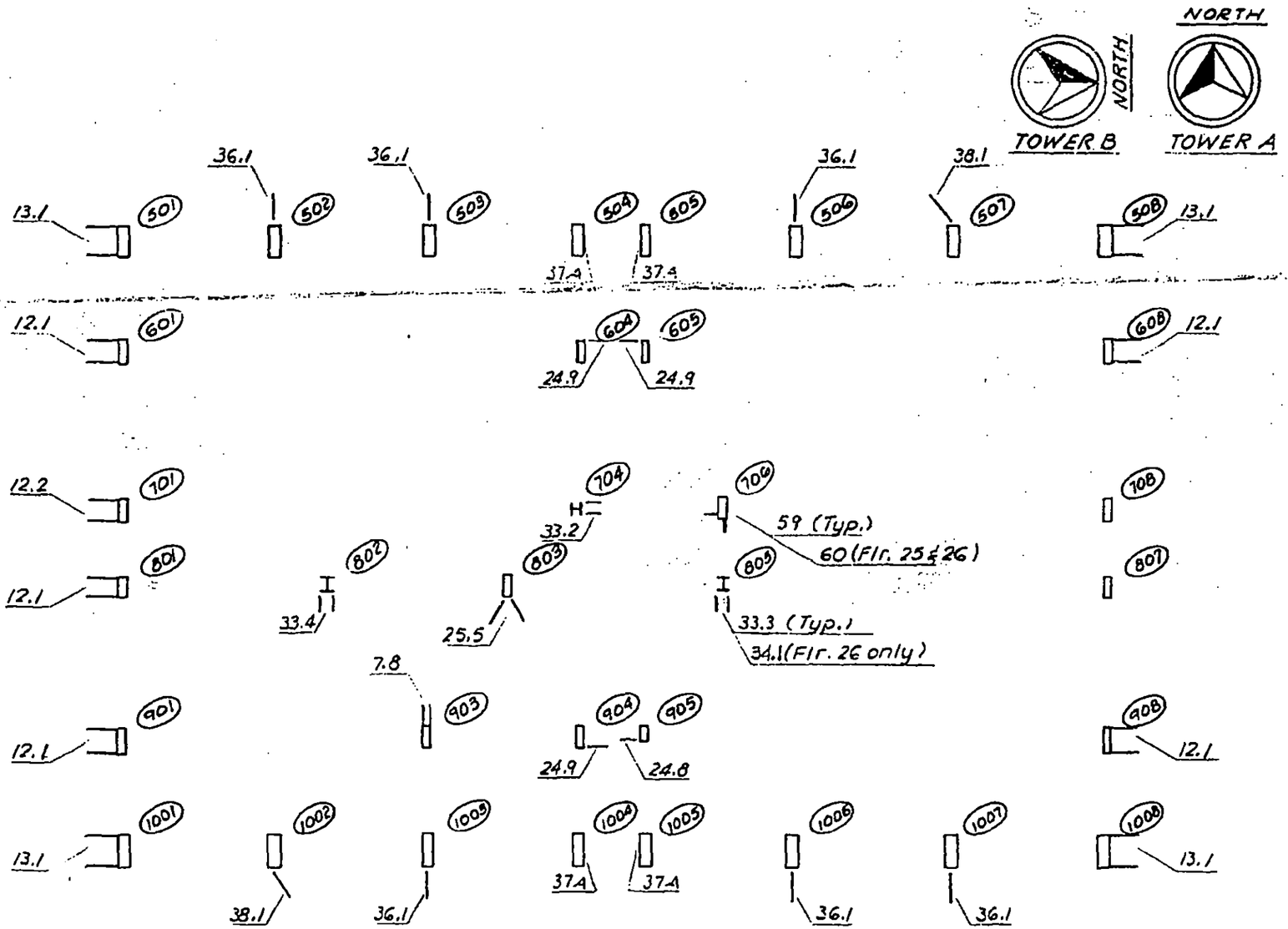

LICENSED PROFESSIONAL ENGINEER
LESLIE E. ROBERTSON
No. 34360
UNIVERSITY OF THE STATE OF NEW YORK

DESIGNED
DRAWN F. Smith
REVIEWED W. Brewer

18-A81-18

SKILLING, HELLE, CHRISTIANSEN, ROBERTSON — Structural & Civil Engineers

PROJECT THE WORLD TRADE CENTER | TITLE STRAP ANCHORS - KEY PLANS - FLOORS 27-33 | DATE 2-7-69

REVISIONS

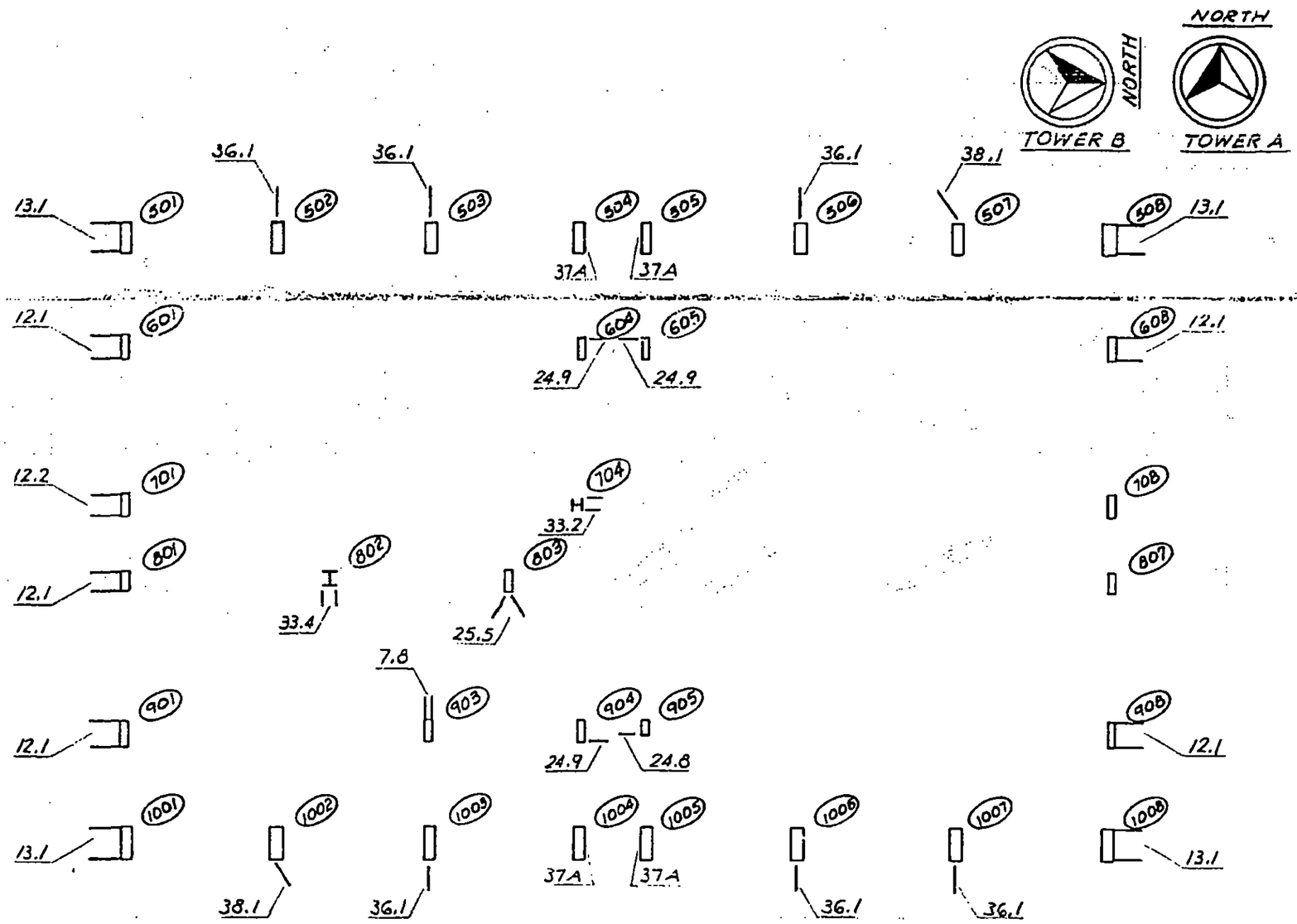

LICENSED PROFESSIONAL ENGINEER — LESLIE E. ROBERTSON — No. 34360 — UNIVERSITY OF THE STATE OF NEW YORK

DESIGNED W. Brewer

DRAWN F. Smith

REVISED W. Brewer

18 - ABI - 19

SKILLING, HELLE, CHRISTIANSEN, ROBERTSON — Structural & Civil Engineers

PROJECT THE WORLD TRADE CENTER | TITLE STRAP ANCHORS - KEY PLANS - FLOOR 34 | DATE 2-7-69

REVISIONS

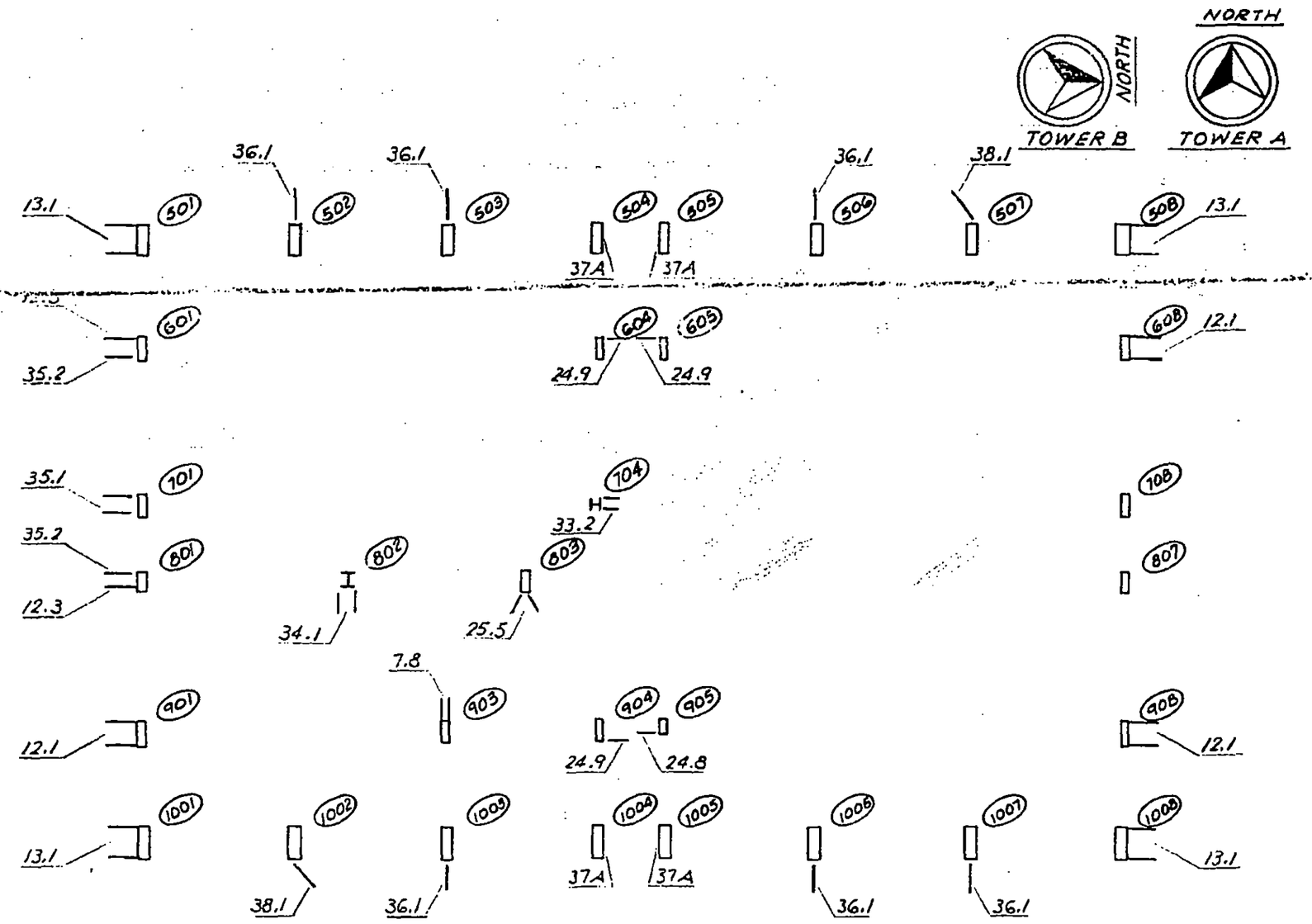

LICENSED PROFESSIONAL ENGINEER
LESLIE E. ROBERTSON
No. 34360
UNIVERSITY OF THE STATE OF NEW YORK

DESIGNED L. Robertson
DRAWN F. Smith
REVIEWED W. Brewer

18-AB1-20

SKILLING, HELLE, CHRISTIANSEN, ROBERTSON — Structural & Civil Engineers

PROJECT THE WORLD TRADE CENTER | TITLE STRAP ANCHORS - KEY PLANS - FLOORS 35-38 | DATE 2-7-69

REVISIONS

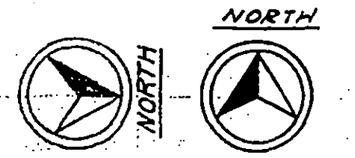

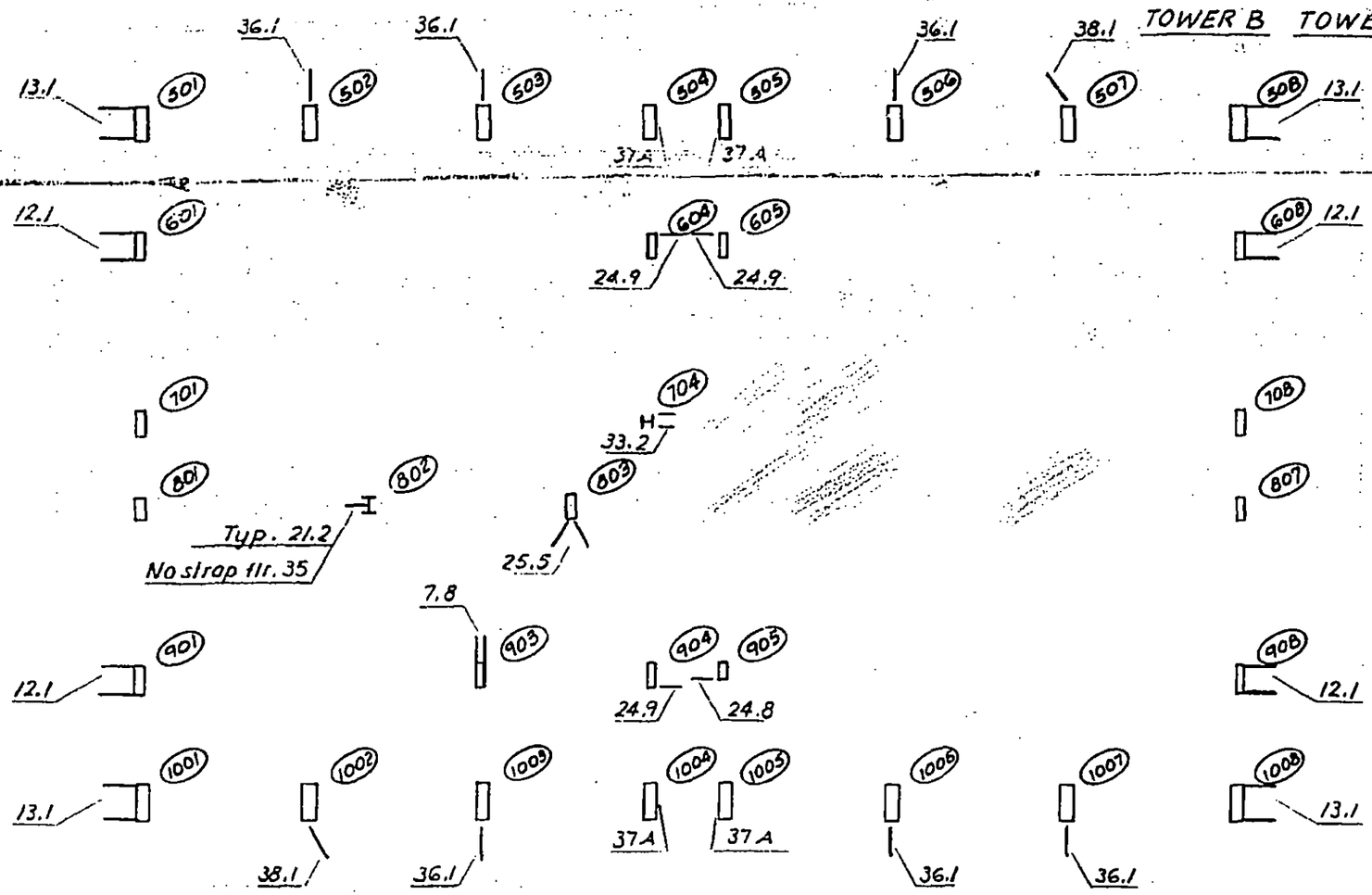

LICENSED PROFESSIONAL ENGINEER — LESLIE E. ROBERTSON — No. 34360 — UNIVERSITY OF THE STATE OF NEW YORK

DESIGNED L. E. Robertson

DRAWN F. Smith

REVIEWED W. Brewer

16-AB1-21

SKILLING, HELLE, CHRISTIANSEN, ROBERTSON — Structural & Civil Engineers

PROJECT: THE WORLD TRADE CENTER | TITLE: STRAP ANCHORS - KEY PLANS - FLOOR 39 & 40 | DATE: 2-7-69

REVISIONS

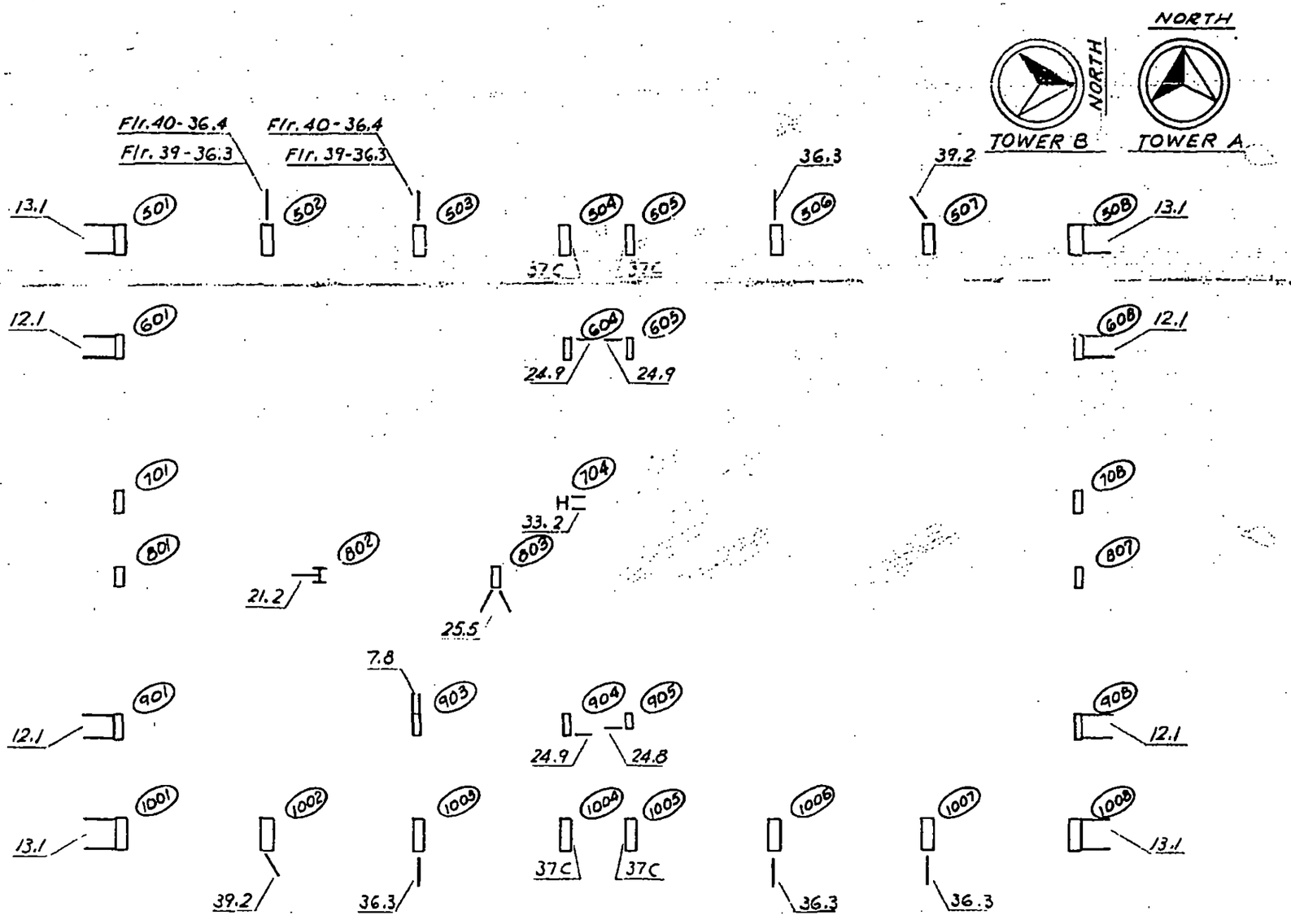

LICENSED PROFESSIONAL ENGINEER
LESLIE E. ROBERTSON
No. 34360
UNIVERSITY OF THE STATE OF NEW YORK

DESIGNED: L. O'Neill

DRAWN: F. Smith

REVIEWED: W. Brewer

18 - AB1 - 22

SKILLING, HELLE, CHRISTIANSEN, ROBERTSON — Structural & Civil Engineers

PROJECT THE WORLD TRADE CENTER | TITLE STRAP ANCHORS - KEY PLANS - FLOOR 41 | DATE 5-28-69

REVISIONS

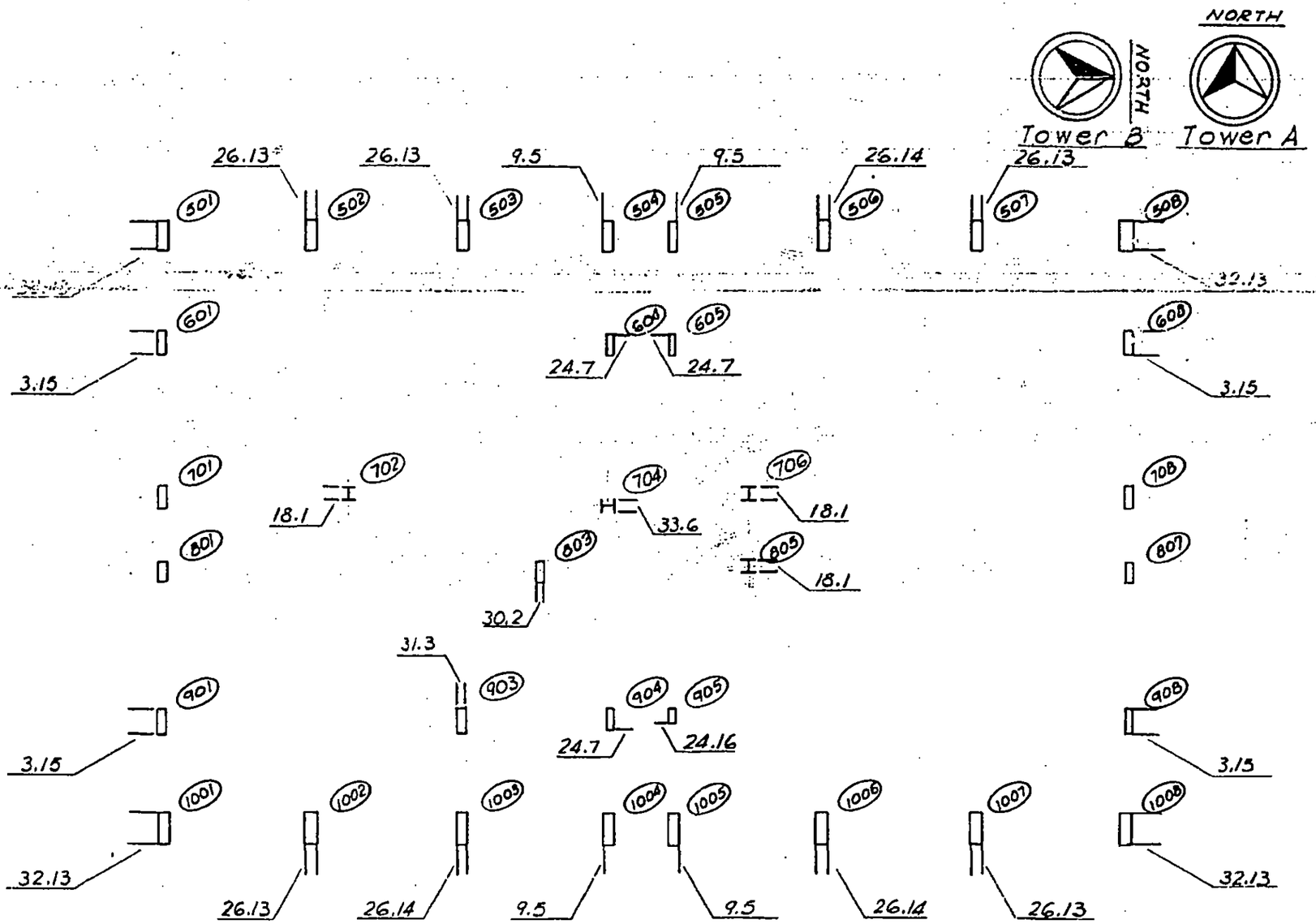

LICENSED PROFESSIONAL ENGINEER
LESLIE E. ROBERTSON
No. 34360
UNIVERSITY OF THE STATE OF NEW YORK

DESIGNED

DRAWN

REVIEWED

18-481-23

SKILLING, HELLE, CHRISTIANSEN, ROBERTSON — Structural & Civil Engineers

PROJECT THE WORLD TRADE CENTER | TITLE KEY PLAN FOR ANCHOR STRAPS- FLOOR 43 | DATE 5-28-69

REVISIONS

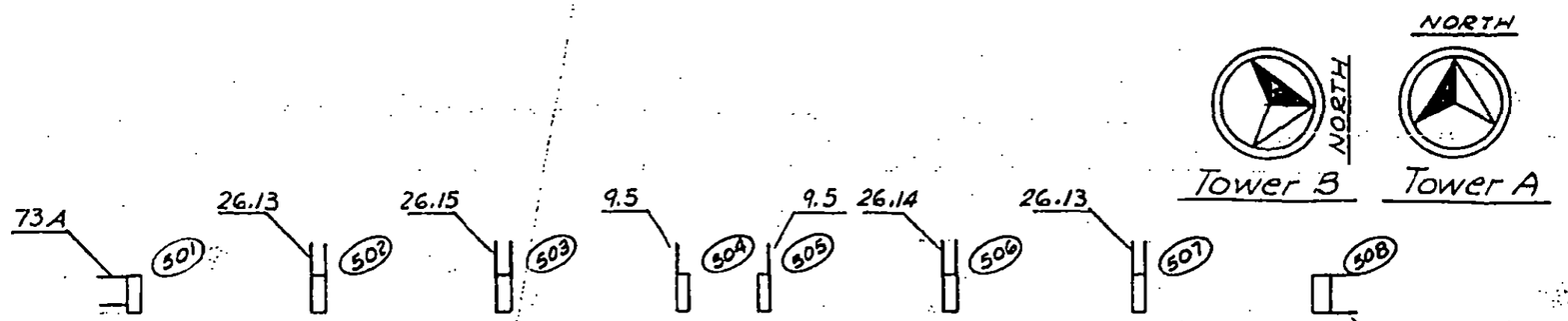

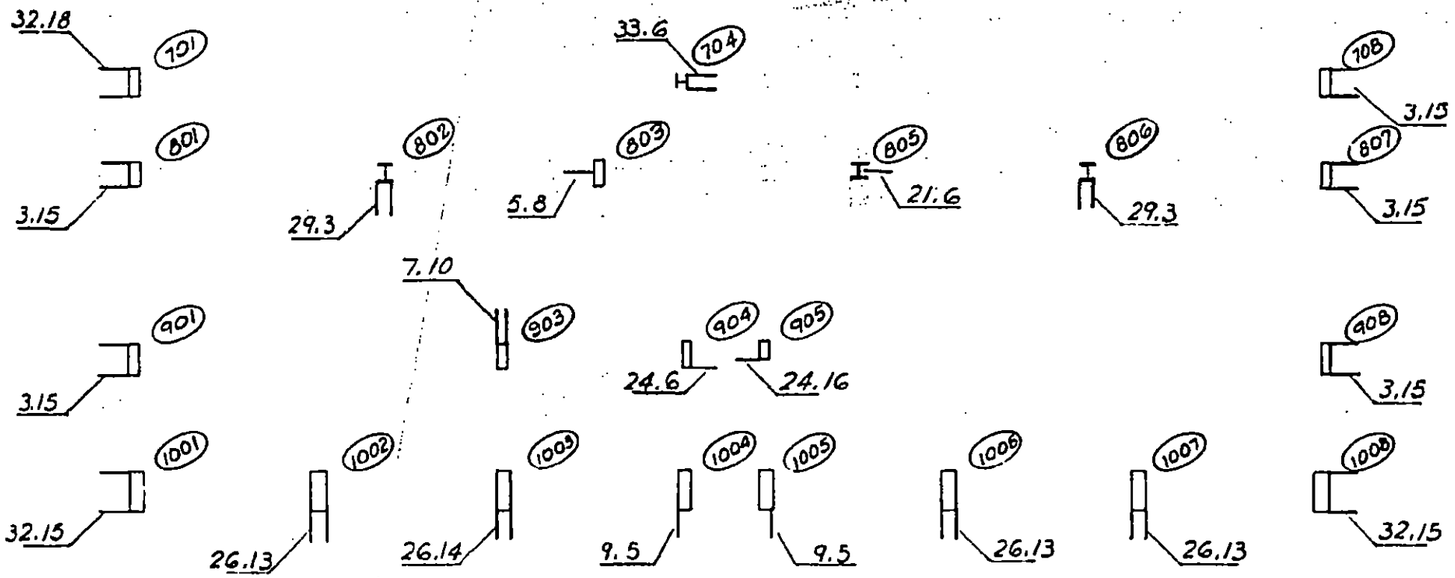

LICENSED PROFESSIONAL ENGINEER
LESLIE E. ROBERTSON
No. 34360
UNIVERSITY OF THE STATE OF NEW YORK

DESIGNED

DRAWN

REVIEWED

18-AB1-24

SKILLING, HELLE, CHRISTIANSEN, ROBERTSON — Structural & Civil Engineers

PROJECT THE WORLD TRADE CENTER | TITLE KEY PLAN FOR ANCHOR STRAPS- FLOOR 44 | DATE 4-30-69

REVISIONS

5-28-69

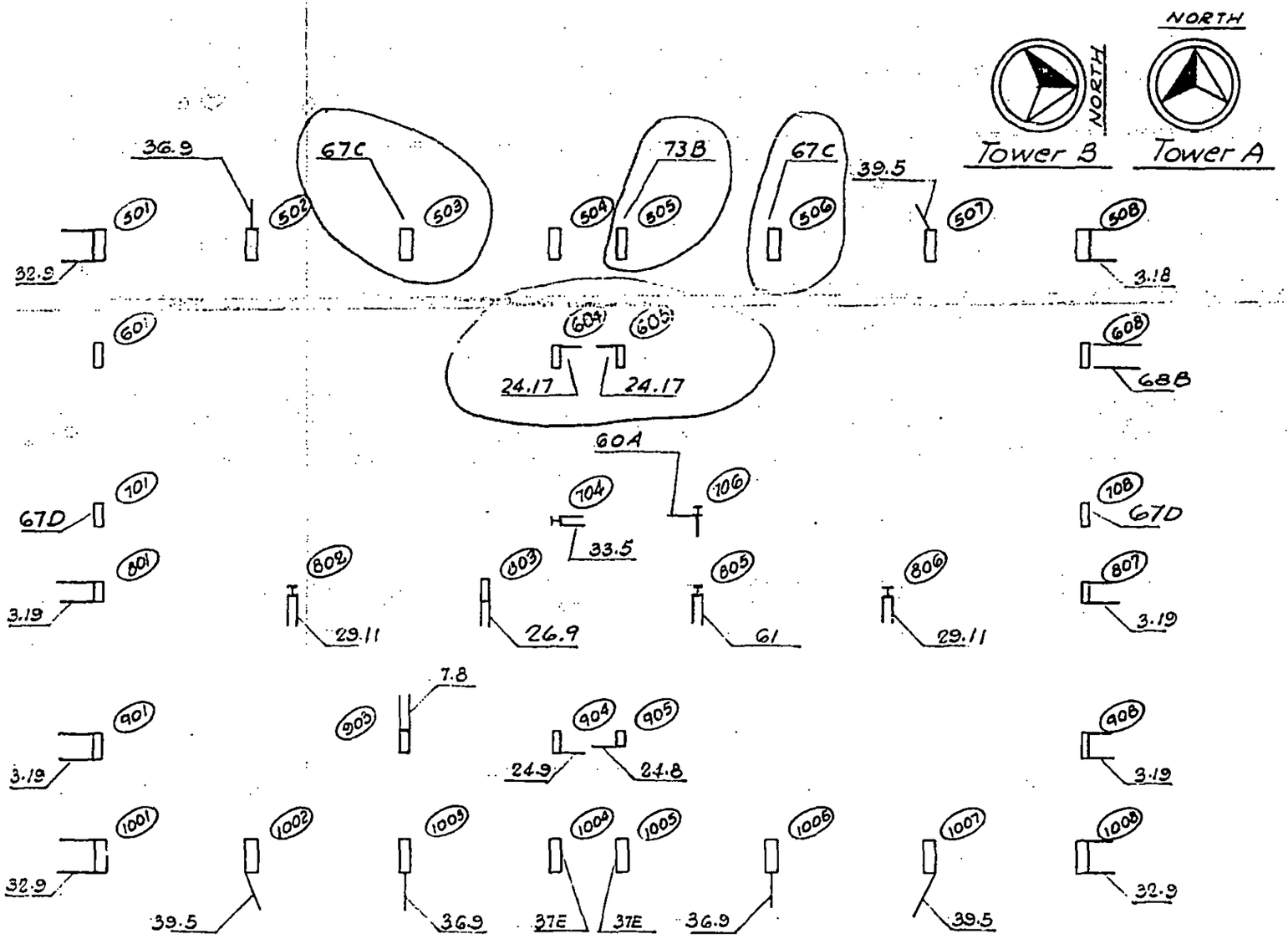

LICENSED PROFESSIONAL ENGINEER
LESLIE E. ROBERTSON
No. 34360
UNIVERSITY OF THE STATE OF NEW YORK

DESIGNED

DRAWN S.T.M.

REVIEWED W. Brewer

18-AB1-25

SKILLING, HELLE, CHRISTIANSEN, ROBERTSON — Structural & Civil Engineers

PROJECT THE WORLD TRADE CENTER | TITLE KEY PLAN FOR ANCHOR STRAPS- FLOOR 45 | DATE 4-30-69

REVISIONS

5-28-69

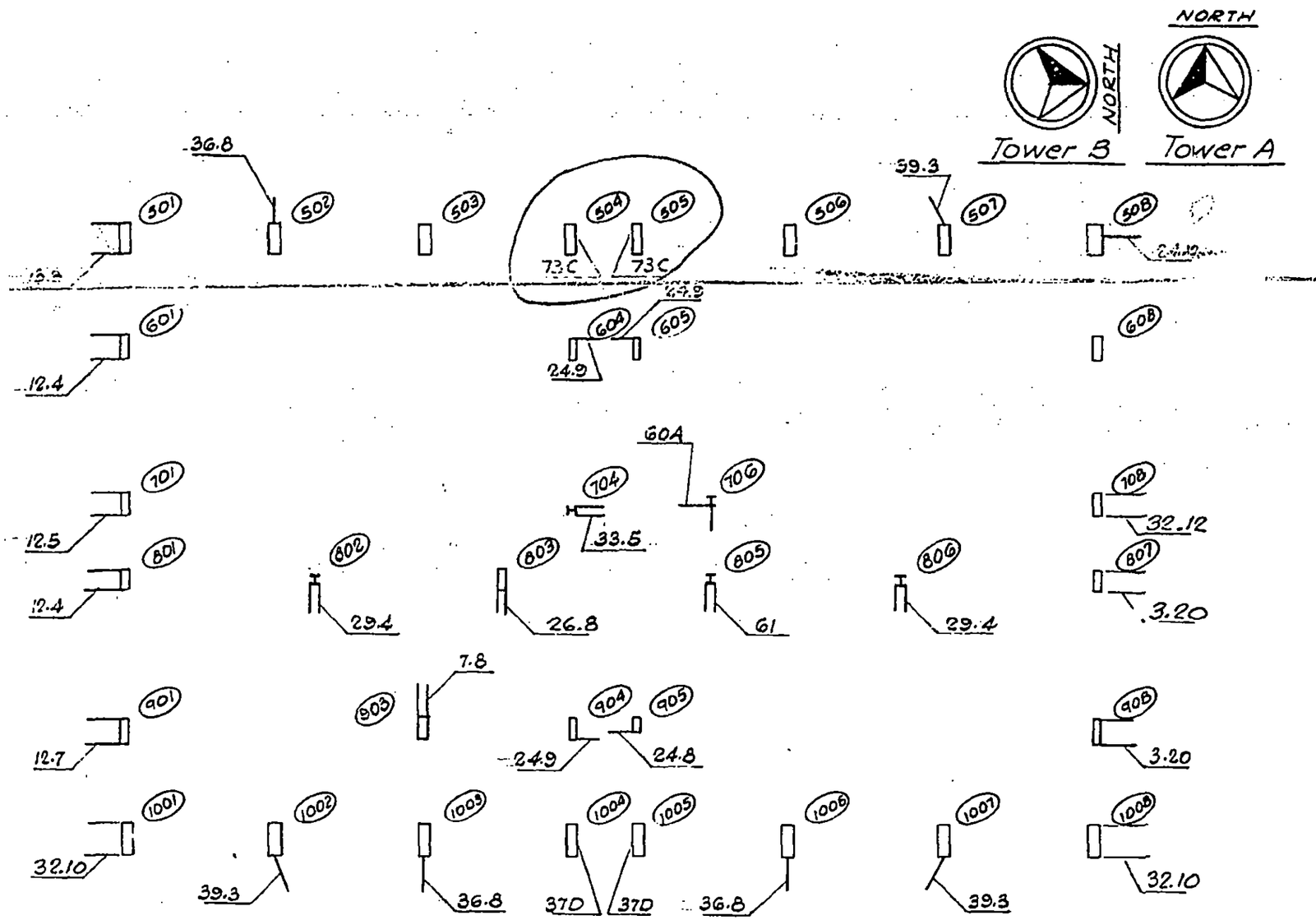

LICENSED PROFESSIONAL ENGINEER
LESLIE E. ROBERTSON
No. 34360
UNIVERSITY OF THE STATE OF NEW YORK

1

DESIGNED

DRAWN S.T.M.

REVIEWED O. Brewer

18-481-26

SKILLING, HELLE, CHRISTIANSEN, ROBERTSON — Structural & Civil Engineers

PROJECT THE WORLD TRADE CENTER | TITLE KEY PLAN FOR ANCHOR STRAPS- FLOOR 46 | DATE 4-30-69

REVISIONS

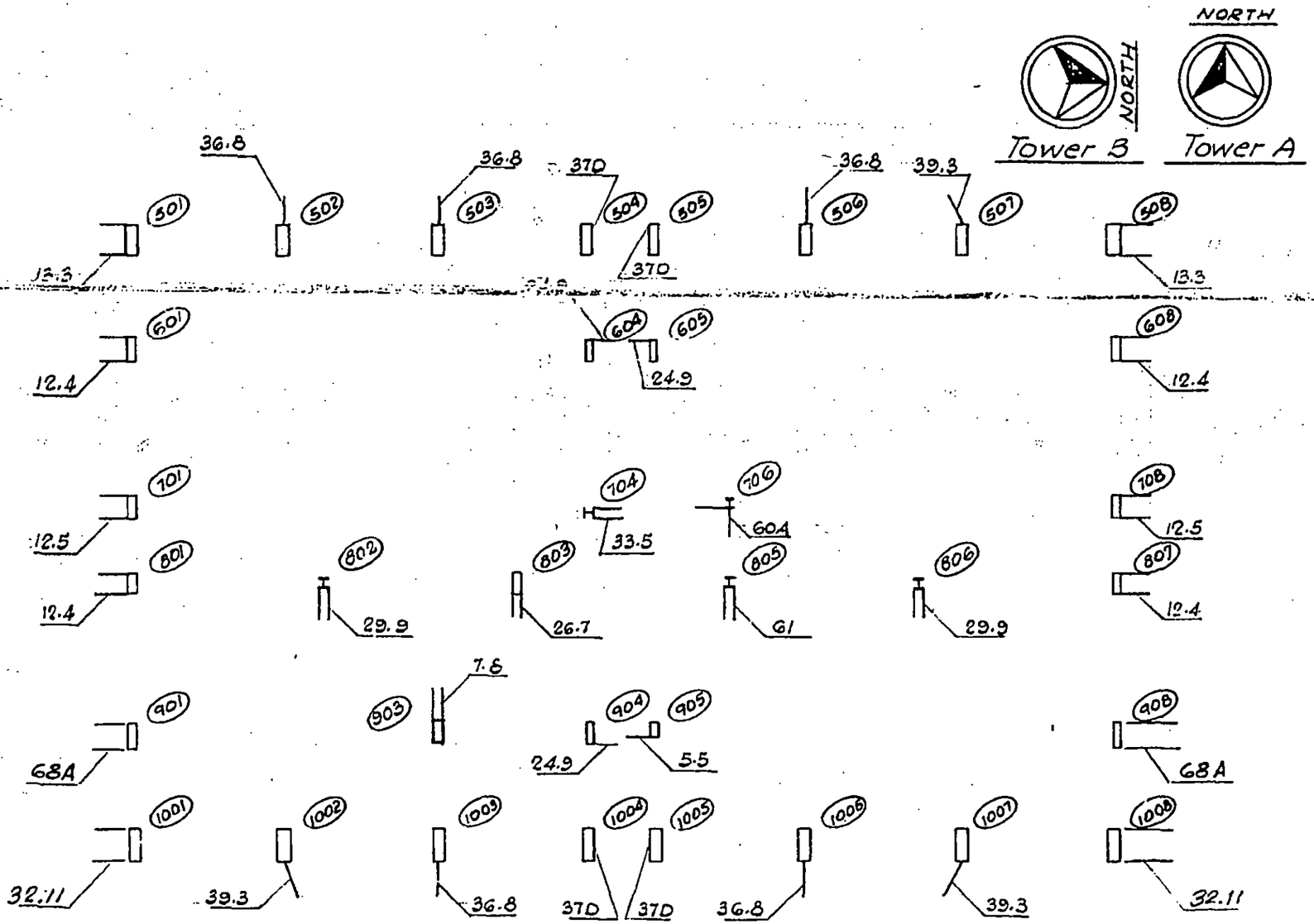

LICENSED PROFESSIONAL ENGINEER — LESLIE E. ROBERTSON — No. 34360 — UNIVERSITY OF THE STATE OF NEW YORK

3

DESIGNED

DRAWN STM

REVIEWED W. Brewer

18-AB1-27

SKILLING, HELLE, CHRISTIANSEN, ROBERTSON — Structural & Civil Engineers

PROJECT THE WORLD TRADE CENTER | TITLE KEY PLAN FOR ANCHOR STRAPS- FLOOR 47 | DATE 4-30-69

REVISIONS

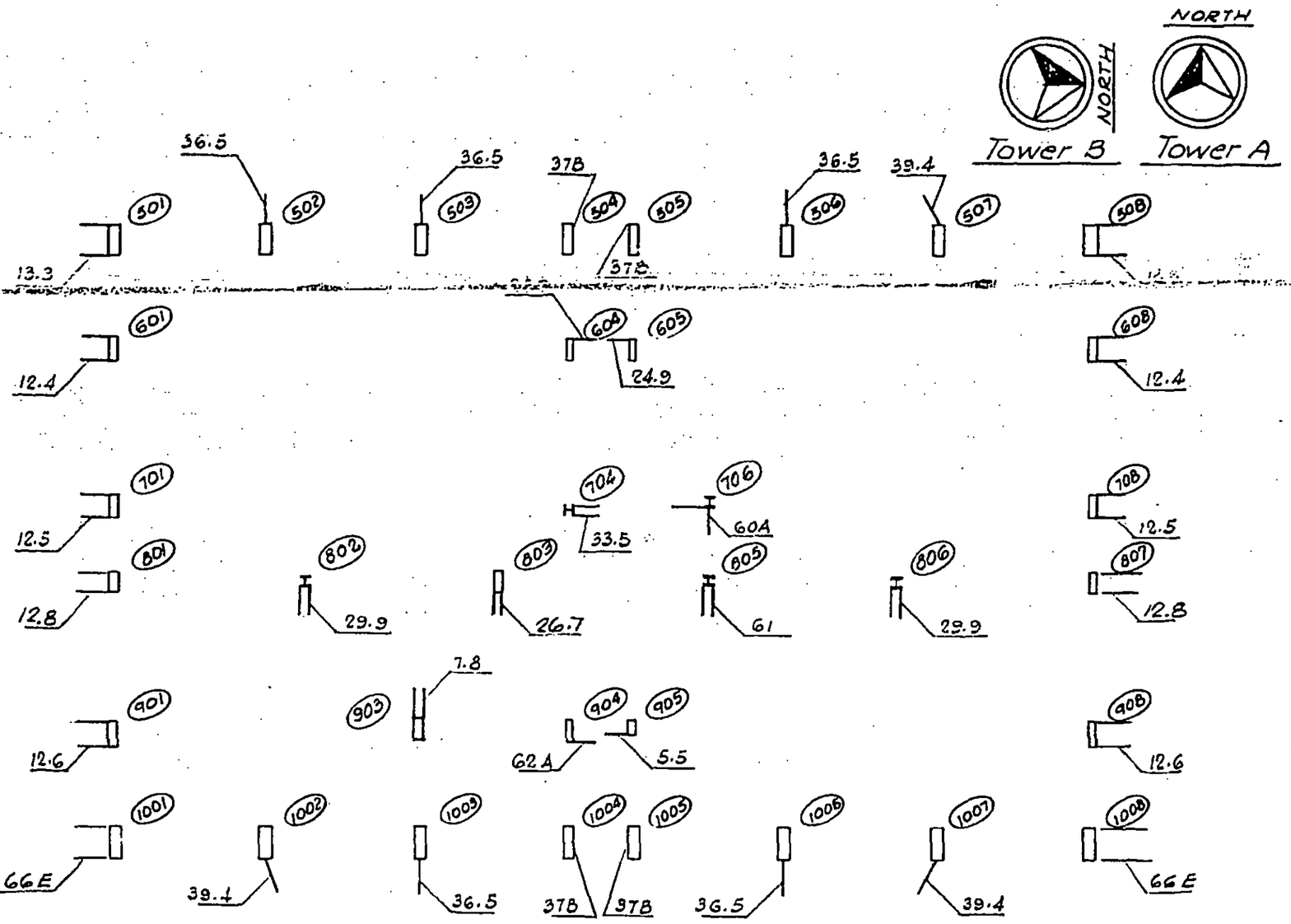

LICENSED PROFESSIONAL ENGINEER
LESLIE E. ROBERTSON
No. 34360
UNIVERSITY OF THE STATE OF NEW YORK

4

DESIGNED

DRAWN S.T.M.

REVIEWED W Brewer

18-AB1-28

SKILLING, HELLE, CHRISTIANSEN, ROBERTSON — Structural & Civil Engineers

PROJECT THE WORLD TRADE CENTER | TITLE KEY PLAN FOR ANCHOR STRAPS- FLOOR 48 | DATE 4-30-69

REVISIONS

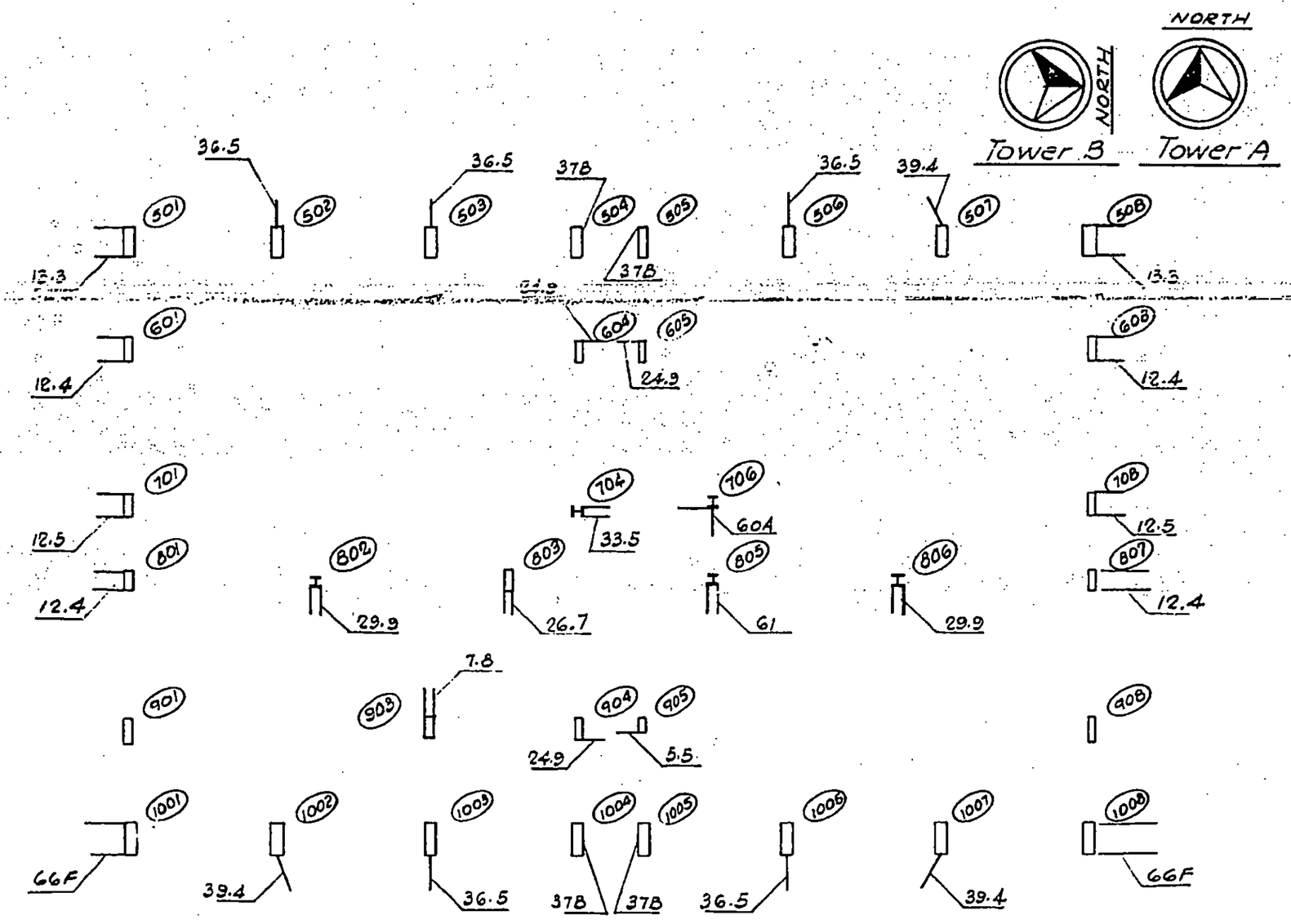

LICENSED PROFESSIONAL ENGINEER
LESLIE E. ROBERTSON
No. 34360
UNIVERSITY OF THE STATE OF NEW YORK

DESIGNED

DRAWN S.T.M.

REVIEWED W. Brewer

18-AB1-29

SKILLING, HELLE, CHRISTIANSEN, ROBERTSON — Structural & Civil Engineers

PROJECT THE WORLD TRADE CENTER | TITLE KEY PLAN FOR ANCHOR STRAPS-FL 49-55 | DATE 4-30-69

REVISIONS

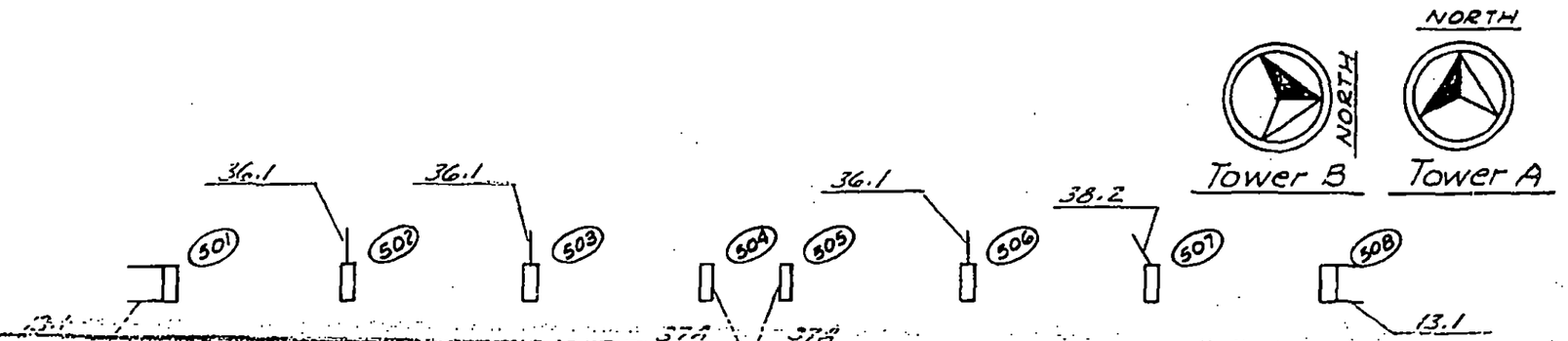

LICENSED PROFESSIONAL ENGINEER
LESLIE E. ROBERTSON
No. 34360
UNIVERSITY OF THE STATE OF NEW YORK

DESIGNED

DRAWN J. Adams

REVIEWED W. Brewer

18-A81-30

SKILLING, HELLE, CHRISTIANSEN, ROBERTSON — Structural & Civil Engineers

PROJECT THE WORLD TRADE CENTER | TITLE STRAP ANCHORS - KEY PLANS - FLOOR 56 | DATE 4-30-69

REVISIONS

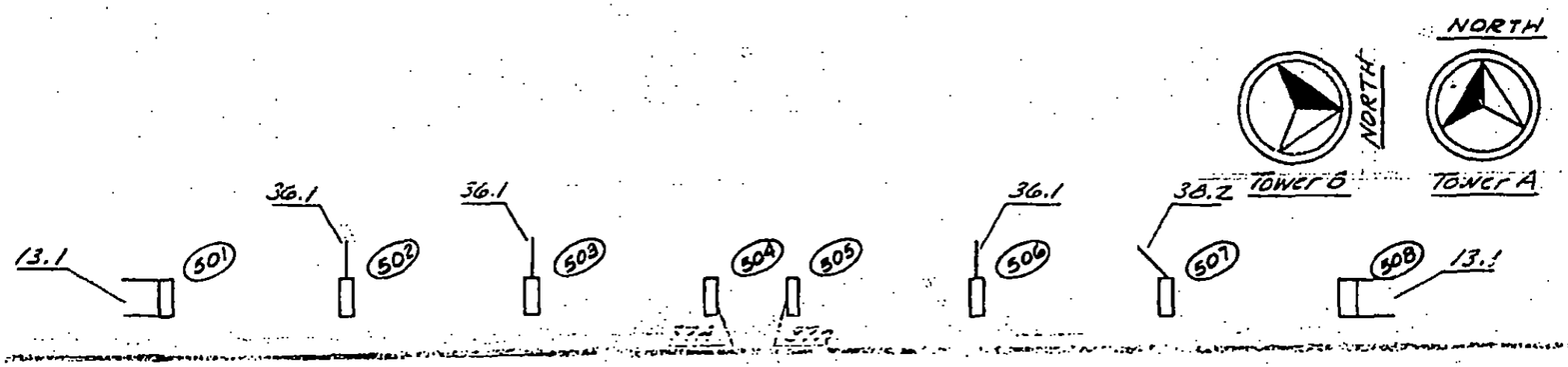

LICENSED PROFESSIONAL ENGINEER
LESLIE E. ROBERTSON
No. 34360
UNIVERSITY OF THE STATE OF NEW YORK

DESIGNED

DRAWN J. Adams

REVIEWED C.U. Brewer

18-A81-31

SKILLING, HELLE, CHRISTIANSEN, ROBERTSON — Structural & Civil Engineers

PROJECT THE WORLD TRADE CENTER | TITLE STRAP ANCHORS - KEY PLANS - FLOOR 57 | DATE 4-30-69

REVISIONS

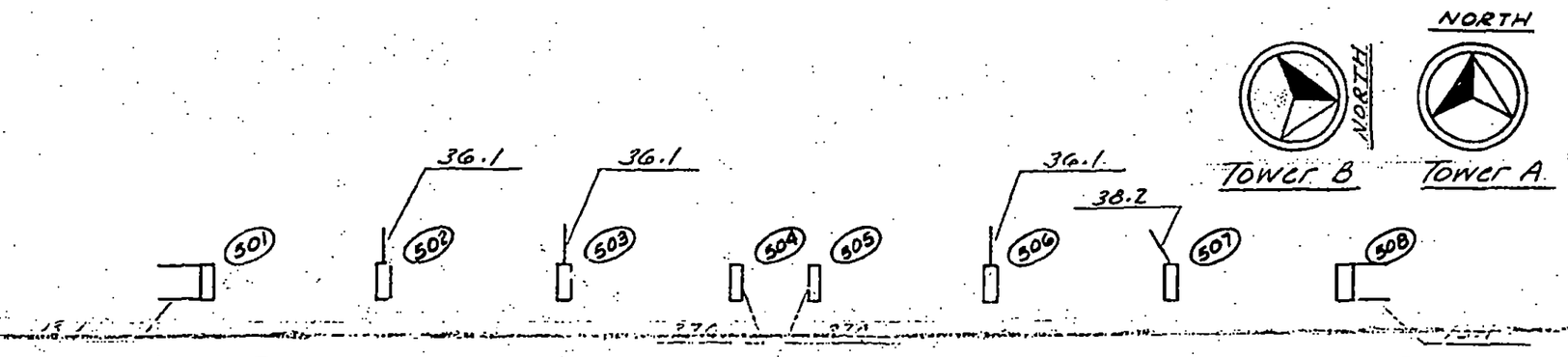

LICENSED PROFESSIONAL ENGINEER
LESLIE E. ROBERTSON
No. 34360
UNIVERSITY OF THE STATE OF NEW YORK

DESIGNED

DRAWN J Adams

REVIEWED W. Brewer

18-AB1-32

SKILLING, HELLE, CHRISTIANSEN, ROBERTSON — Structural & Civil Engineers

PROJECT THE WORLD TRADE CENTER | TITLE STRAP ANCHORS - KEY PLANS - FL 58-59 | DATE 4-30-69

REVISIONS

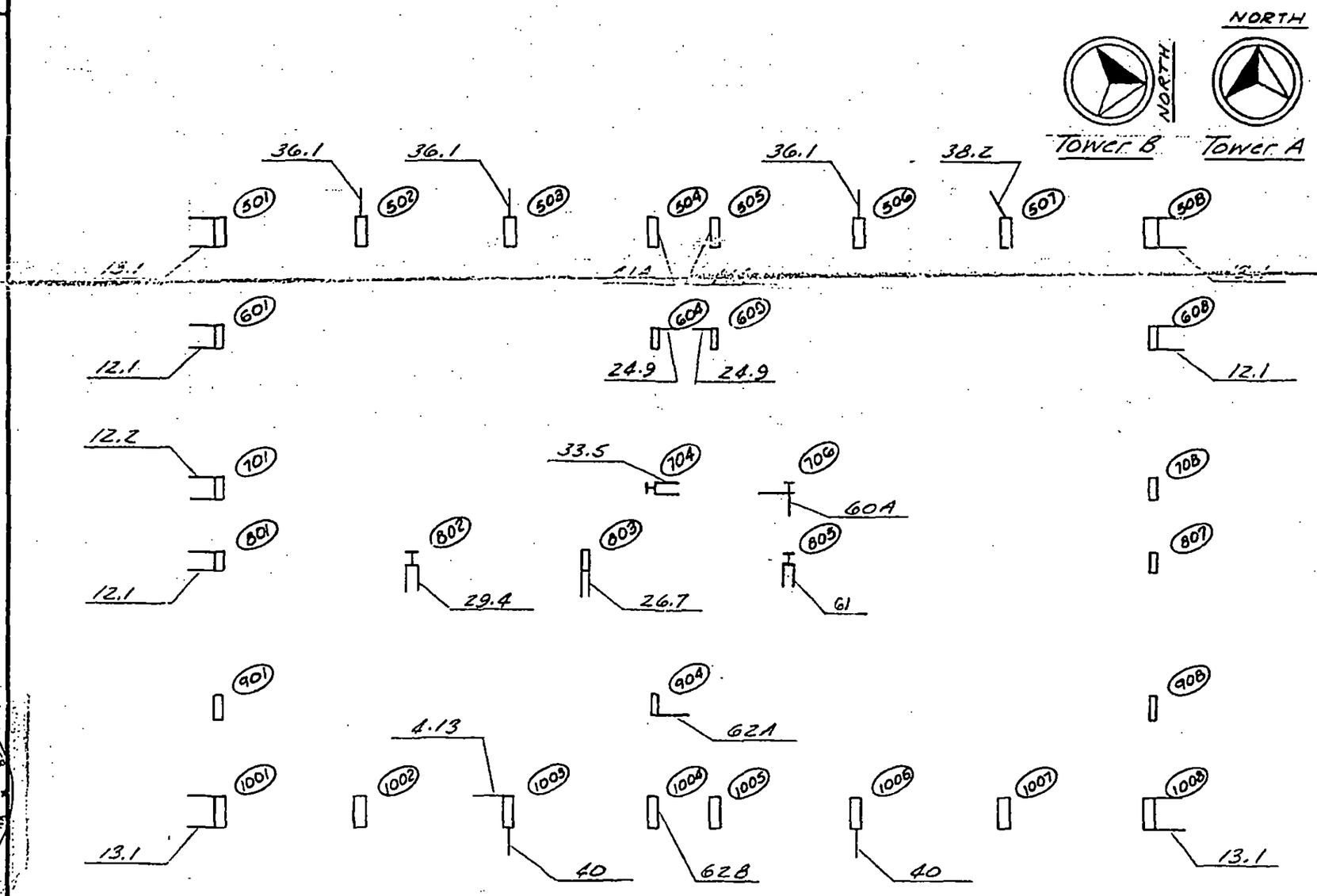

LICENSED PROFESSIONAL ENGINEER
LESLIE E. ROBERTSON
No. 34360
UNIVERSITY OF THE STATE OF NEW YORK

DESIGNED

DRAWN J. Adams

REVIEWED W. Brewer

18-A81-33

SKILLING, HELLE, CHRISTIANSEN, ROBERTSON — Structural & Civil Engineers

PROJECT THE WORLD TRADE CENTER | TITLE KEY PLAN FOR ANCHOR STRAPS- FL 60 | DATE 4-30-69

REVISIONS

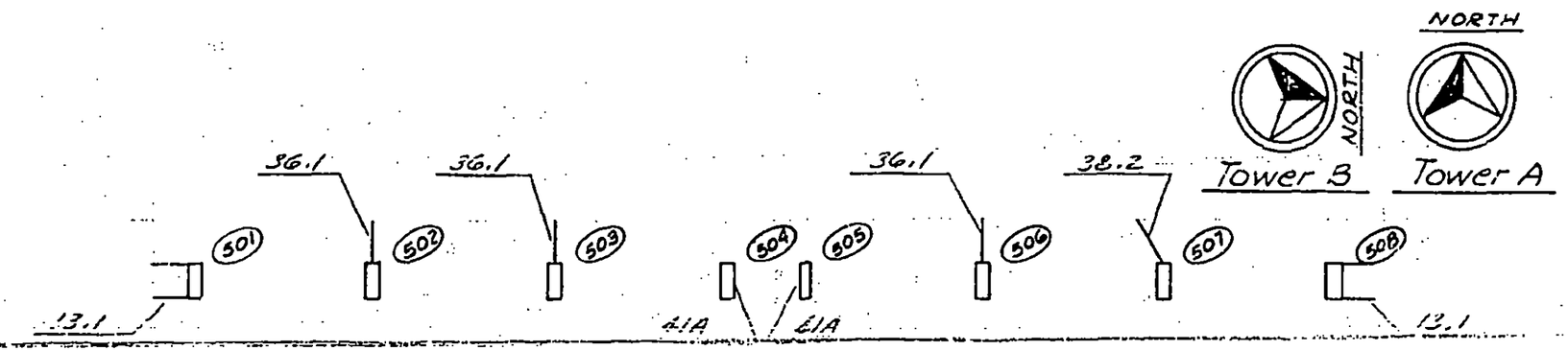

LICENSED PROFESSIONAL ENGINEER — LESLIE E. ROBERTSON — No. 34360 — UNIVERSITY OF THE STATE OF NEW YORK

10

DESIGNED

DRAWN J. Adams

REVIEWED W. Brewer

18-A81-34

1044-L

SKILLING, HELLE, CHRISTIANSEN, ROBERTSON — Structural & Civil Engineers

PROJECT THE WORLD TRADE CENTER | TITLE KEY PLAN FOR ANCHOR STRAPS-FL 61-63 | DATE 4-30-69

REVISIONS

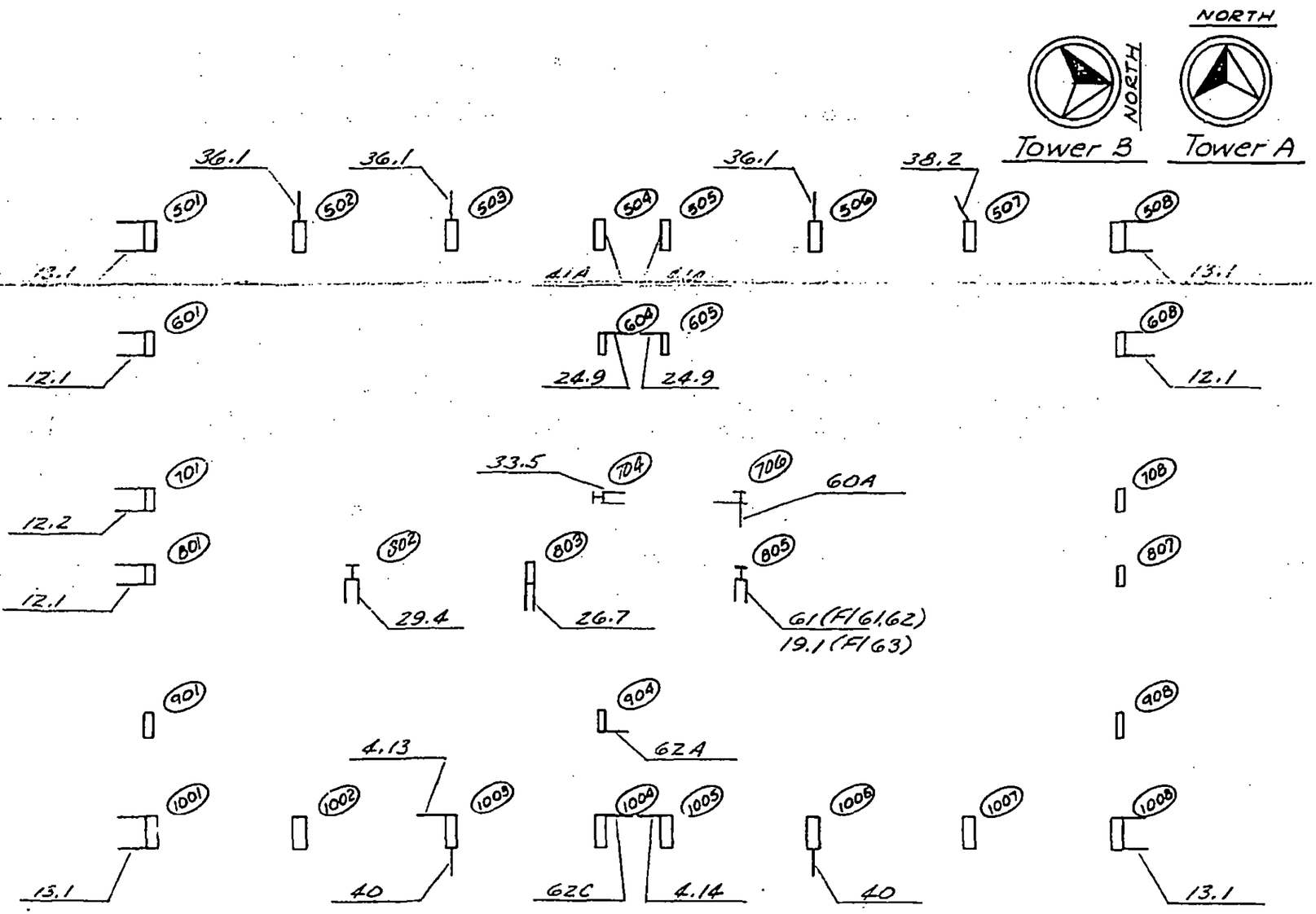

LICENSED PROFESSIONAL ENGINEER
LESLIE E. ROBERTSON
No. 34360
UNIVERSITY OF THE STATE OF NEW YORK

DESIGNED

DRAWN J. Adams

REVIEWED W. Brewer

18-A81-35

SKILLING, HELLE, CHRISTIANSEN, ROBERTSON — Structural & Civil Engineers

PROJECT THE WORLD TRADE CENTER | TITLE KEY PLAN FOR ANCHOR STRAPS-FL 64-66 | DATE 4-30-69

REVISIONS

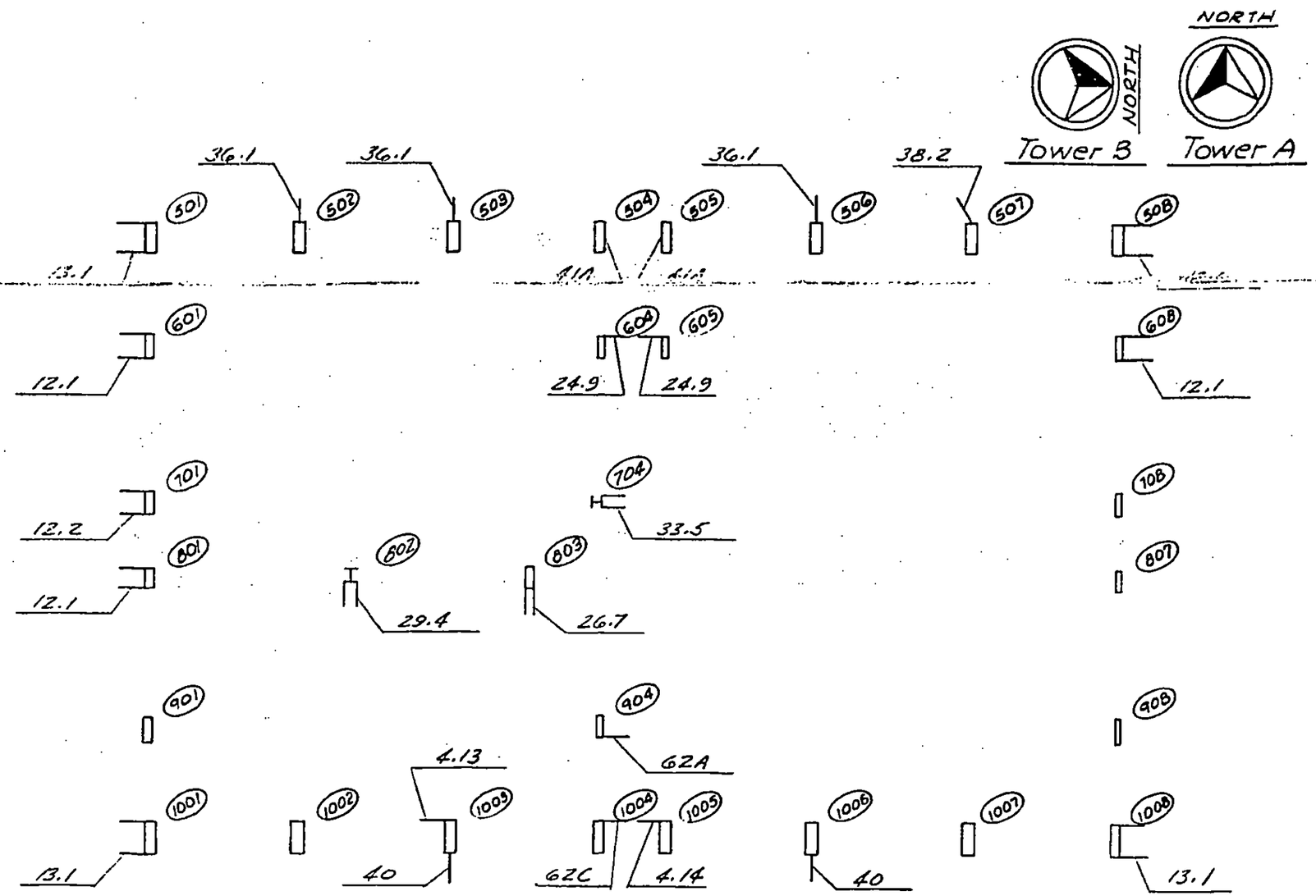

LICENSED PROFESSIONAL ENGINEER
LESLIE E. ROBERTSON
No. 34360
UNIVERSITY OF THE STATE OF NEW YORK

DESIGNED

DRAWN J. Adams

REVIEWED W. Brewer

18-A81-36

SKILLING, HELLE, CHRISTIANSEN, ROBERTSON — Structural & Civil Engineers

PROJECT THE WORLD TRADE CENTER | TITLE KEY PLAN FOR ANCHOR STRAPS-FL67-68-TOWER A | DATE 4-30-69

REVISIONS

NORTH

Tower A

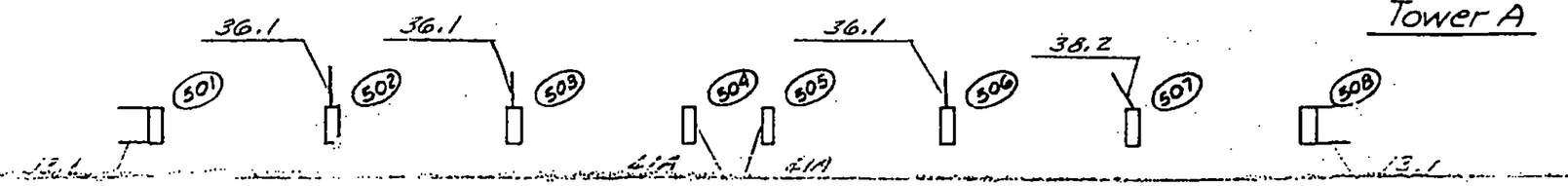

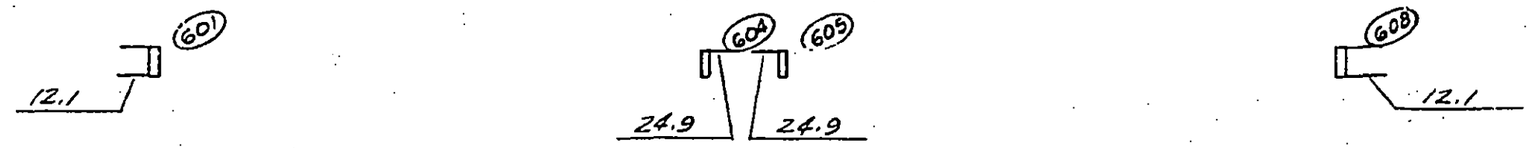

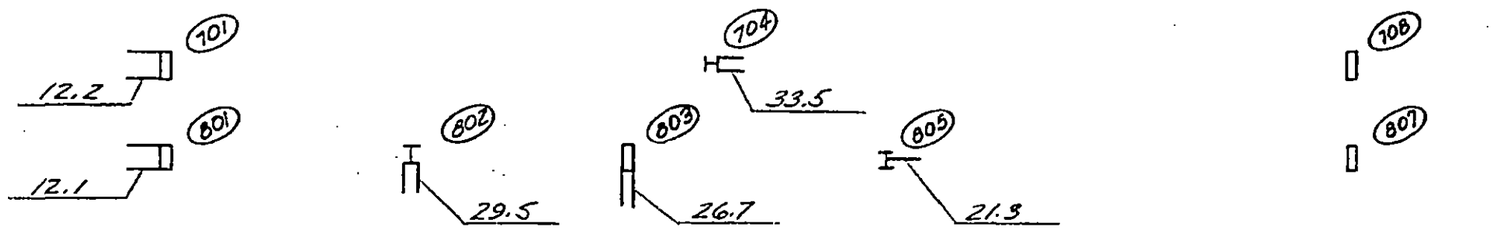

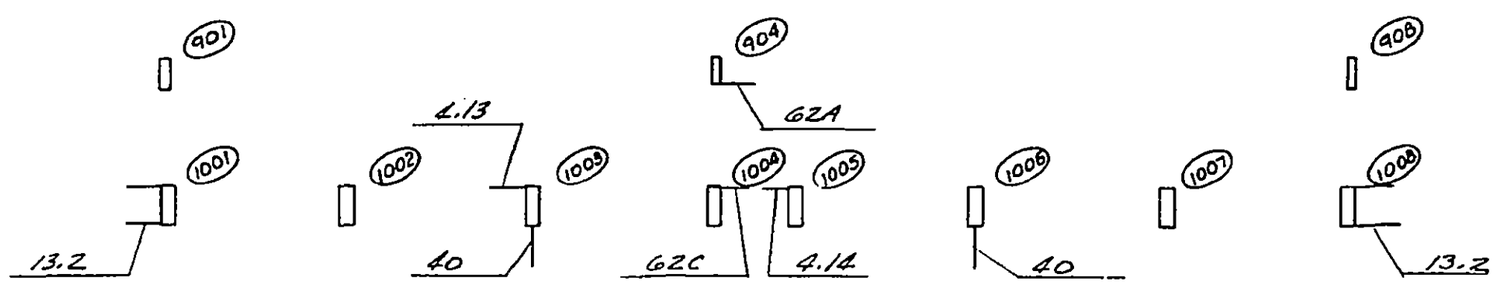

LICENSED PROFESSIONAL ENGINEER
LESLIE E. ROBERTSON
No. 34360
UNIVERSITY OF THE STATE OF NEW YORK

DESIGNED

DRAWN J. Adams

REVIEWED W. Brewer

18-AB1-37

SKILLING, HELLE, CHRISTIANSEN, ROBERTSON — Structural & Civil Engineers

PROJECT THE WORLD TRADE CENTER | TITLE KEY PLAN FOR ANCHOR STRAPS- FL 69 - TOWER A | DATE 4-30-69

REVISIONS

NORTH

Tower A

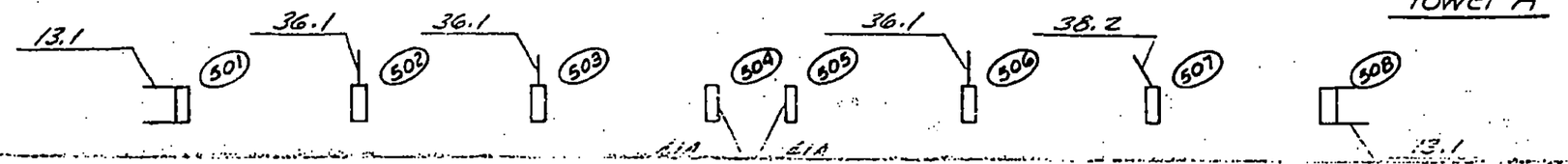

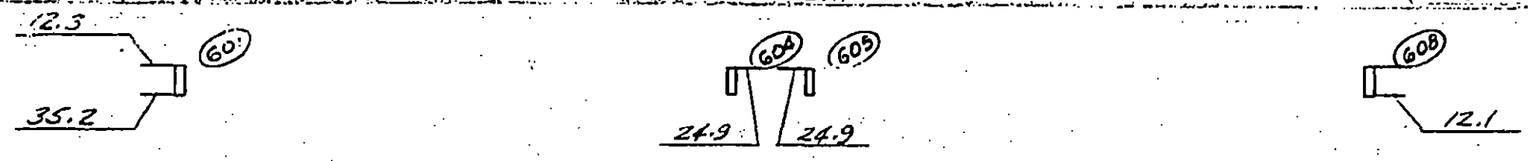

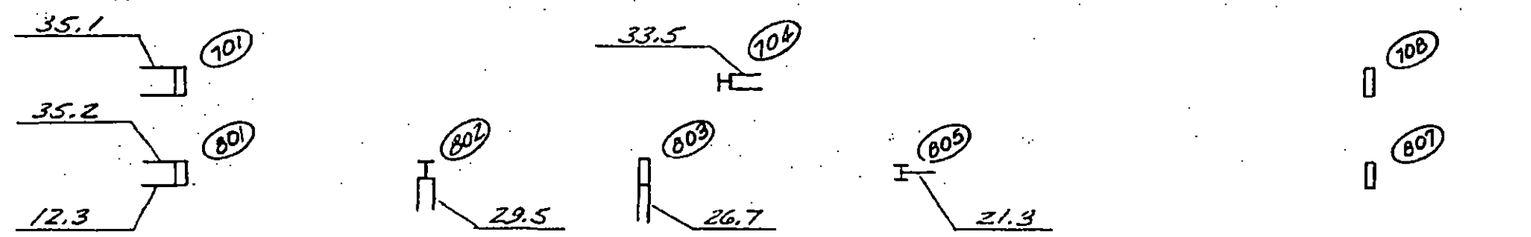

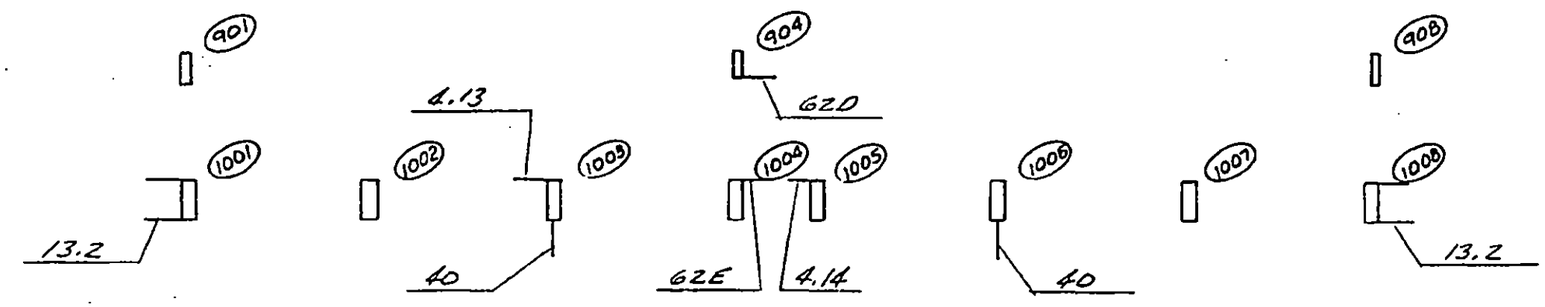

LICENSED PROFESSIONAL ENGINEER
LESLIE E. ROBERTSON
No. 34360
UNIVERSITY OF THE STATE OF NEW YORK

14

DESIGNED

DRAWN J. Adams

REVIEWED W. Brewer

18-AB1-38

SKILLING, HELLE, CHRISTIANSEN, ROBERTSON — Structural & Civil Engineers

PROJECT THE WORLD TRADE CENTER | TITLE KEY PLAN FOR ANCHOR STRAPS-FL 70-71 | DATE 4-30-69

REVISIONS

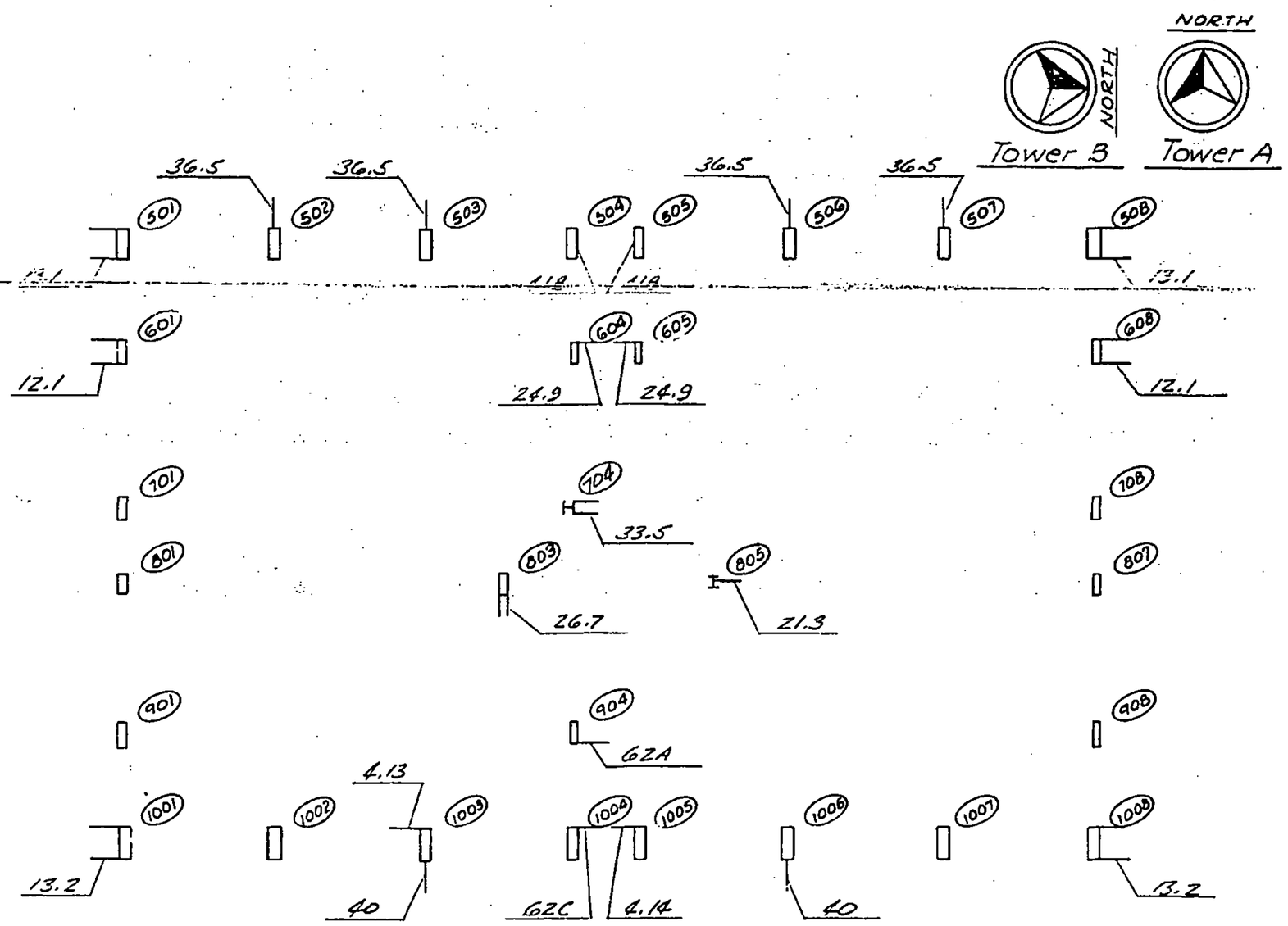

LICENSED PROFESSIONAL ENGINEER
LESLIE E. ROBERTSON
No. 34360
UNIVERSITY OF THE STATE OF NEW YORK

DESIGNED

DRAWN J. Adams

REVIEWED W. Brewer

18-AB1-39

SKILLING, HELLE, CHRISTIANSEN, ROBERTSON — Structural & Civil Engineers

PROJECT THE WORLD TRADE CENTER | TITLE KEY PLAN FOR ANCHOR STRAPS-FL 72-73 | DATE 4-30-69

REVISIONS

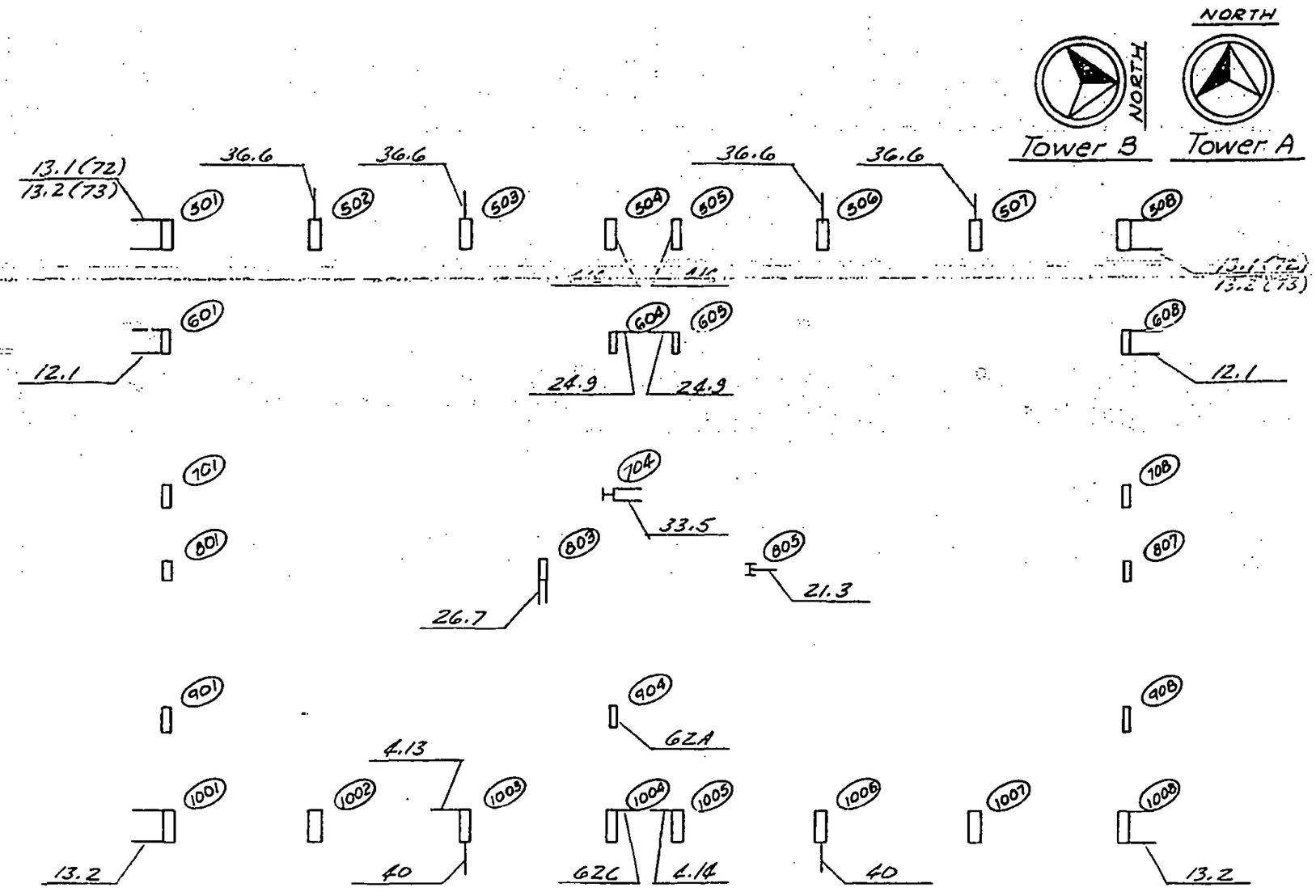

LICENSED PROFESSIONAL ENGINEER LESLIE E. ROBERTSON No. 34360 UNIVERSITY OF THE STATE OF NEW YORK

16

DESIGNED

DRAWN J. Adams

REVIEWED W. Brewer

18-AB1-40

SKILLING, HELLE, CHRISTIANSEN, ROBERTSON — Structural & Civil Engineers

PROJECT THE WORLD TRADE CENTER | TITLE KEY PLAN FOR ANCHOR STRAPS - FL 74 | DATE 4-30-69

REVISIONS

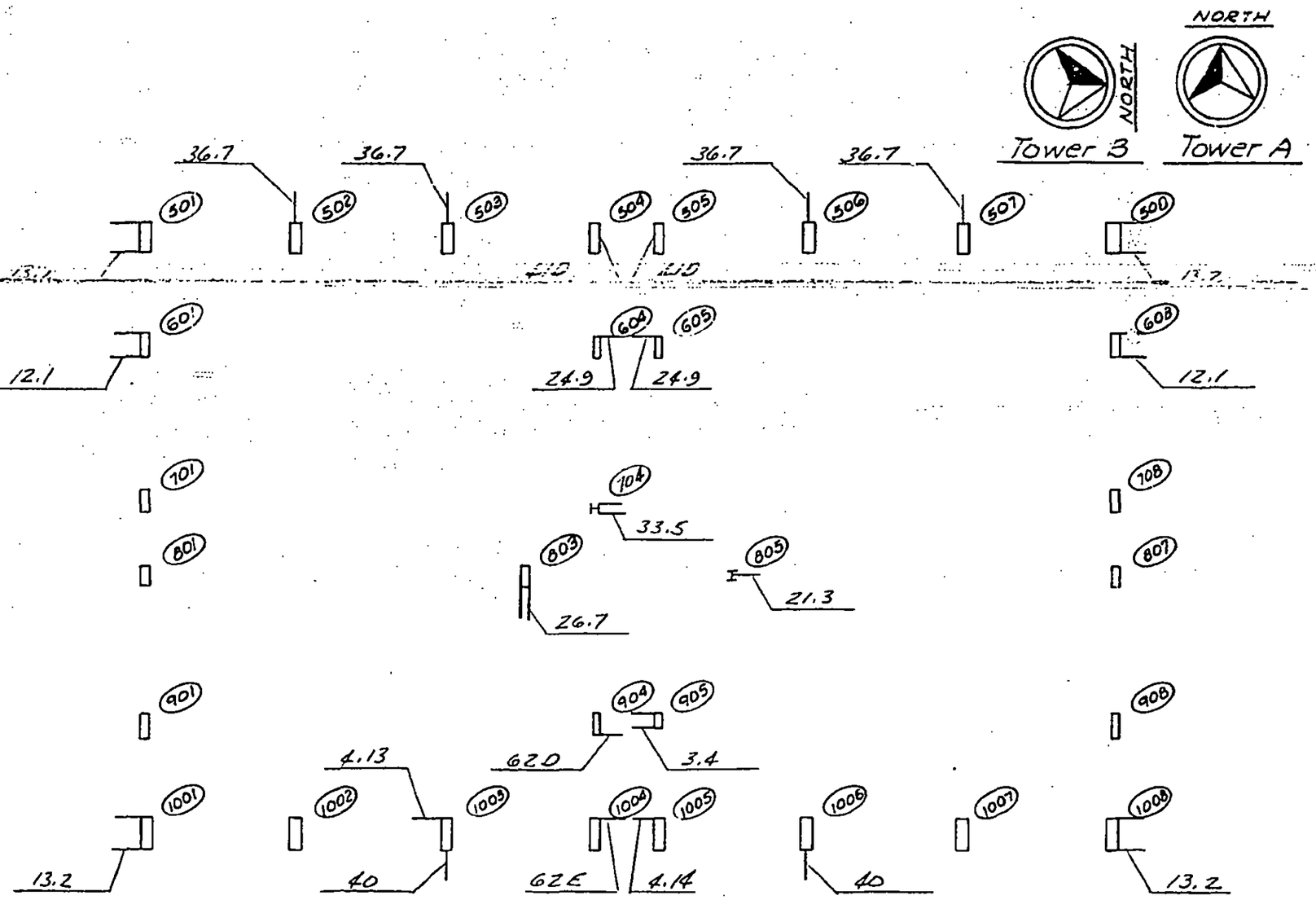

LICENSED PROFESSIONAL ENGINEER
LESLIE E. ROBERTSON
No. 34360
UNIVERSITY OF THE STATE OF NEW YORK

17

DESIGNED

DRAWN J. Adams

REVIEWED W. Brewer

18-AB1-41

SKILLING, HELLE, CHRISTIANSEN, ROBERTSON — Structural & Civil Engineers

PROJECT THE WORLD TRADE CENTER | TITLE STRAP ANCHORS - KEY PLANS - FLOOR 15 | DATE 5-28-69

REVISIONS

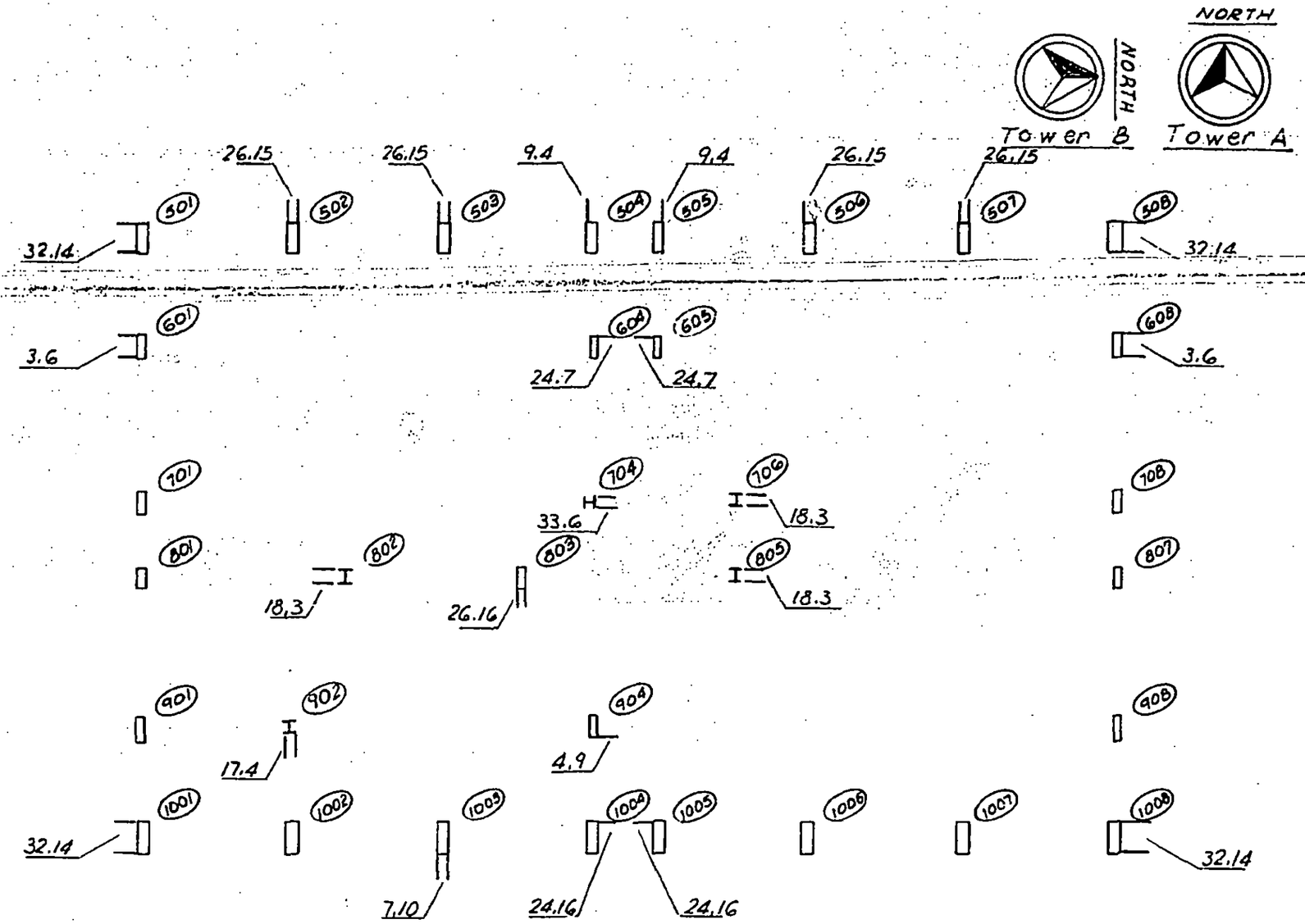

LICENSED PROFESSIONAL ENGINEER
LESLIE E. ROBERTSON
No. 34360
UNIVERSITY OF THE STATE OF NEW YORK

DESIGNED

DRAWN

REVIEWED

18-AB1-42

SKILLING, HELLE, CHRISTIANSEN, ROBERTSON — Structural & Civil Engineers

PROJECT: THE WORLD TRADE CENTER | TITLE: STRAP ANCHORS - KEY PLANS - FLOOR 77 | DATE: 5-28-69

REVISIONS

NORTH

NORTH

Tower B

Tower A

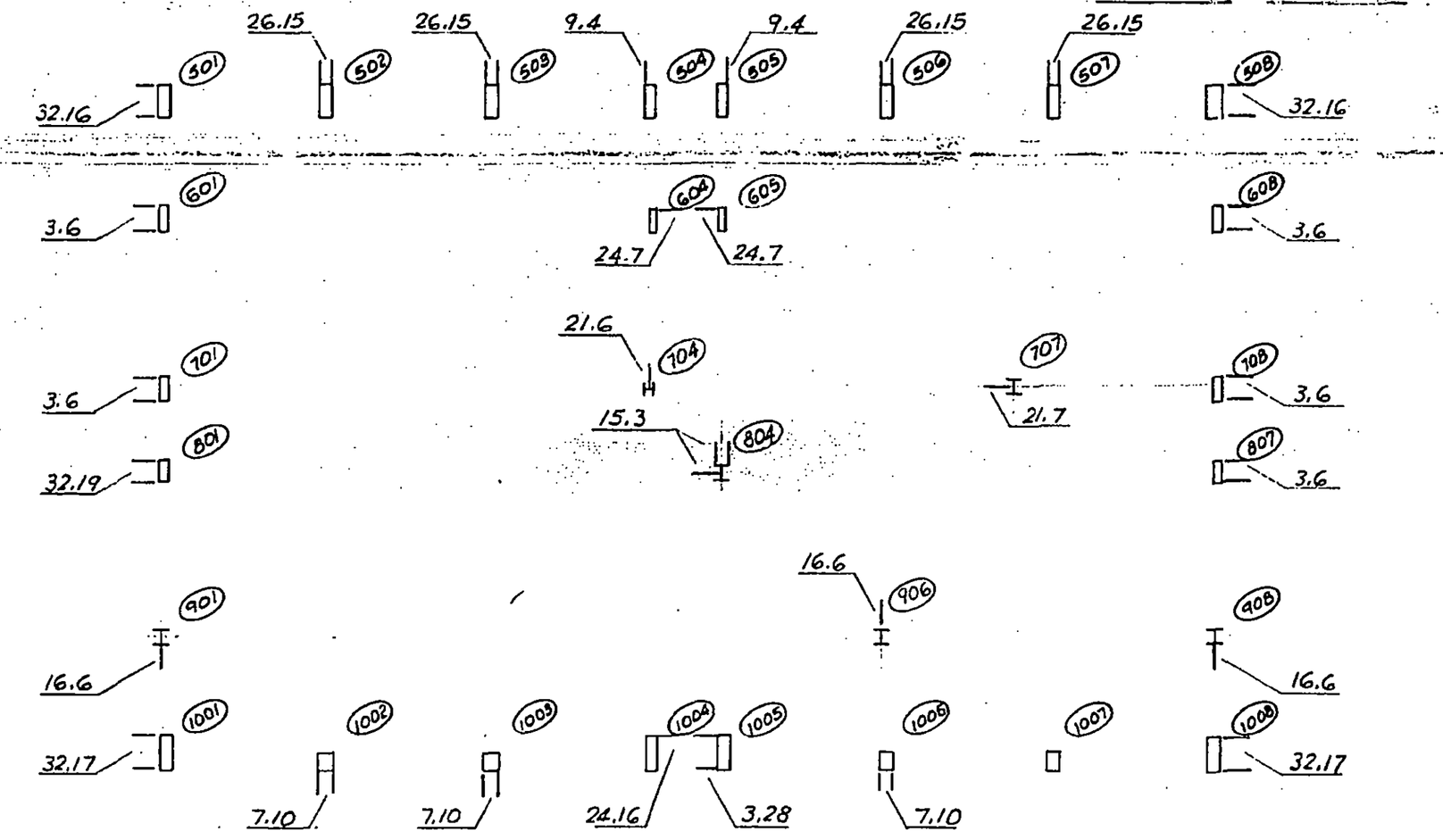

LICENSED PROFESSIONAL ENGINEER
LESLIE E. ROBERTSON
No. 34360
UNIVERSITY OF THE STATE OF NEW YORK

DESIGNED

DRAWN

REVIEWED

18-481-43

SKILLING, HELLE, CHRISTIANSEN, ROBERTSON — Structural & Civil Engineers

PROJECT THE WORLD TRADE CENTER | TITLE KEY PLAN FOR ANCHOR STRAPS-FL 83 | DATE 4-30-69

REVISIONS

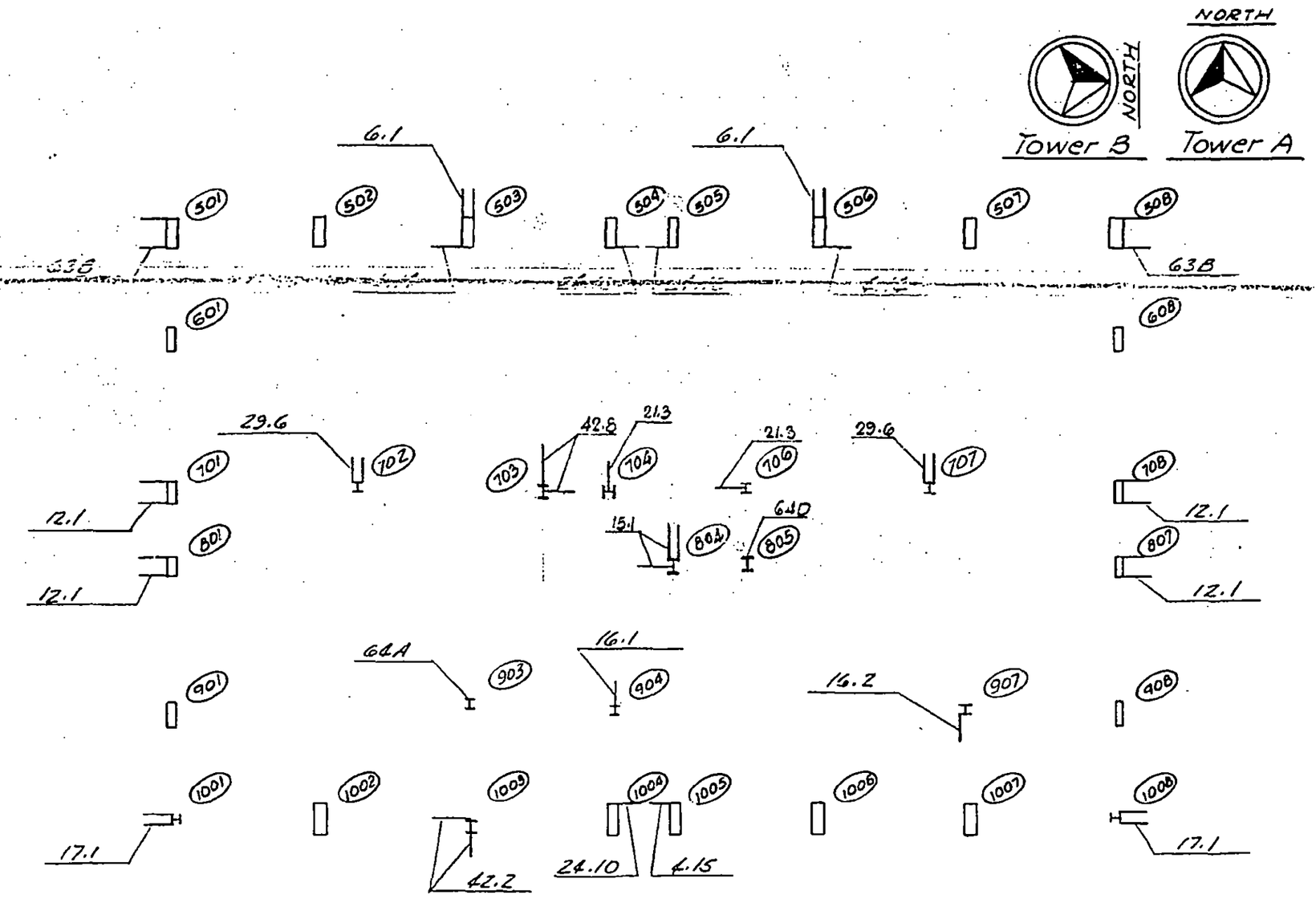

LICENSED PROFESSIONAL ENGINEER
LESLIE E. ROBERTSON
No. 34360
UNIVERSITY OF THE STATE OF NEW YORK

DESIGNED

DRAWN J. Adams

REVIEWED L. E. Robertson

18-A81-49

SKILLING, HELLE, CHRISTIANSEN, ROBERTSON — Structural & Civil Engineers

PROJECT THE WORLD TRADE CENTER | TITLE KEY PLAN FOR ANCHOR STRAPS-FL 84-86 | DATE 4-30-69

REVISIONS

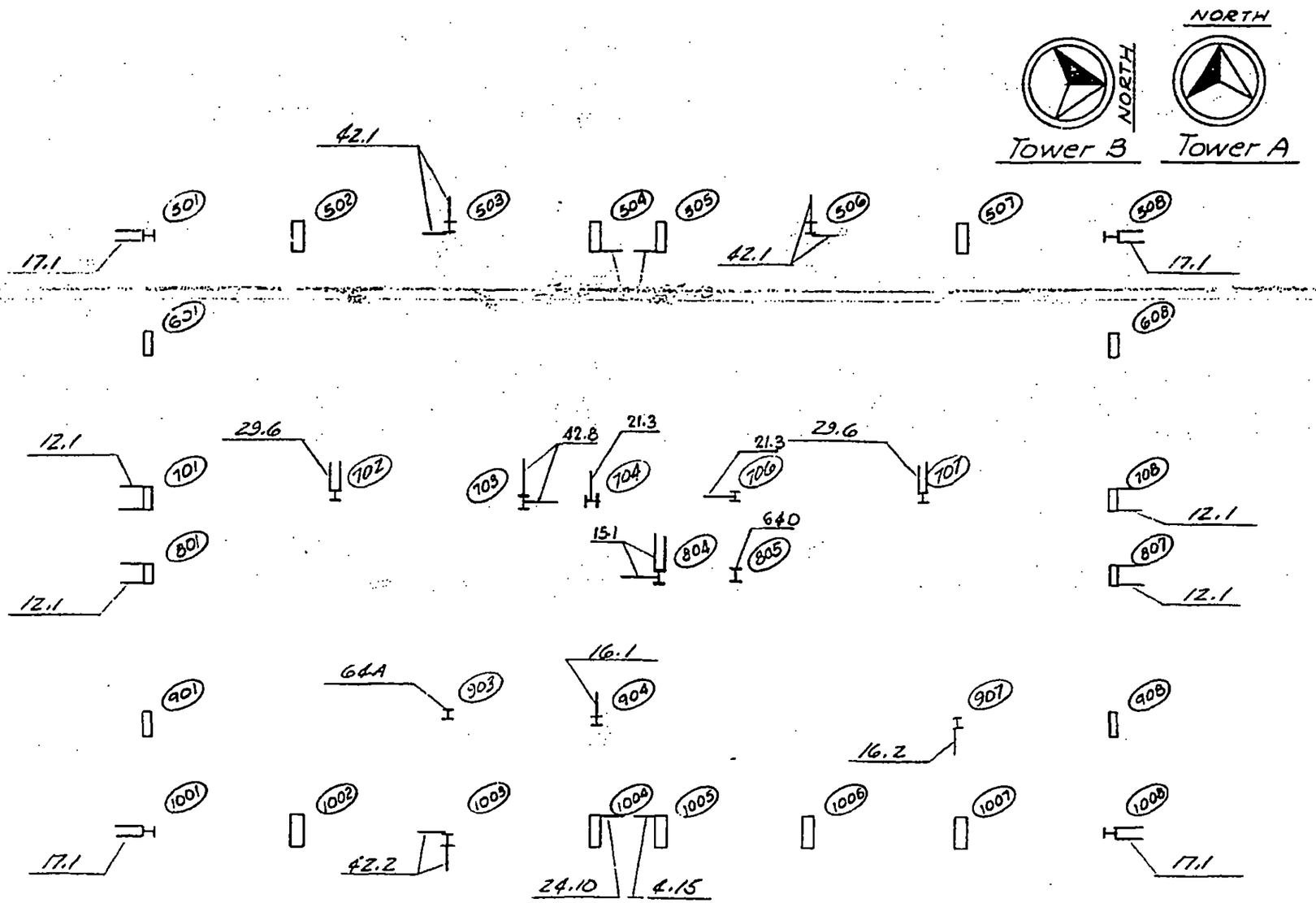

LICENSED PROFESSIONAL ENGINEER
LESLIE E. ROBERTSON
No. 34360
UNIVERSITY OF THE STATE OF NEW YORK

DESIGNED

DRAWN J. Adams

REVIEWED W. Petrewich

18-A81-50

SKILLING, HELLE, CHRISTIANSEN, ROBERTSON — Structural & Civil Engineers

PROJECT THE WORLD TRADE CENTER | TITLE KEY PLAN FOR ANCHOR STRAPS- FL 87-88 | DATE 4-30-69

REVISIONS

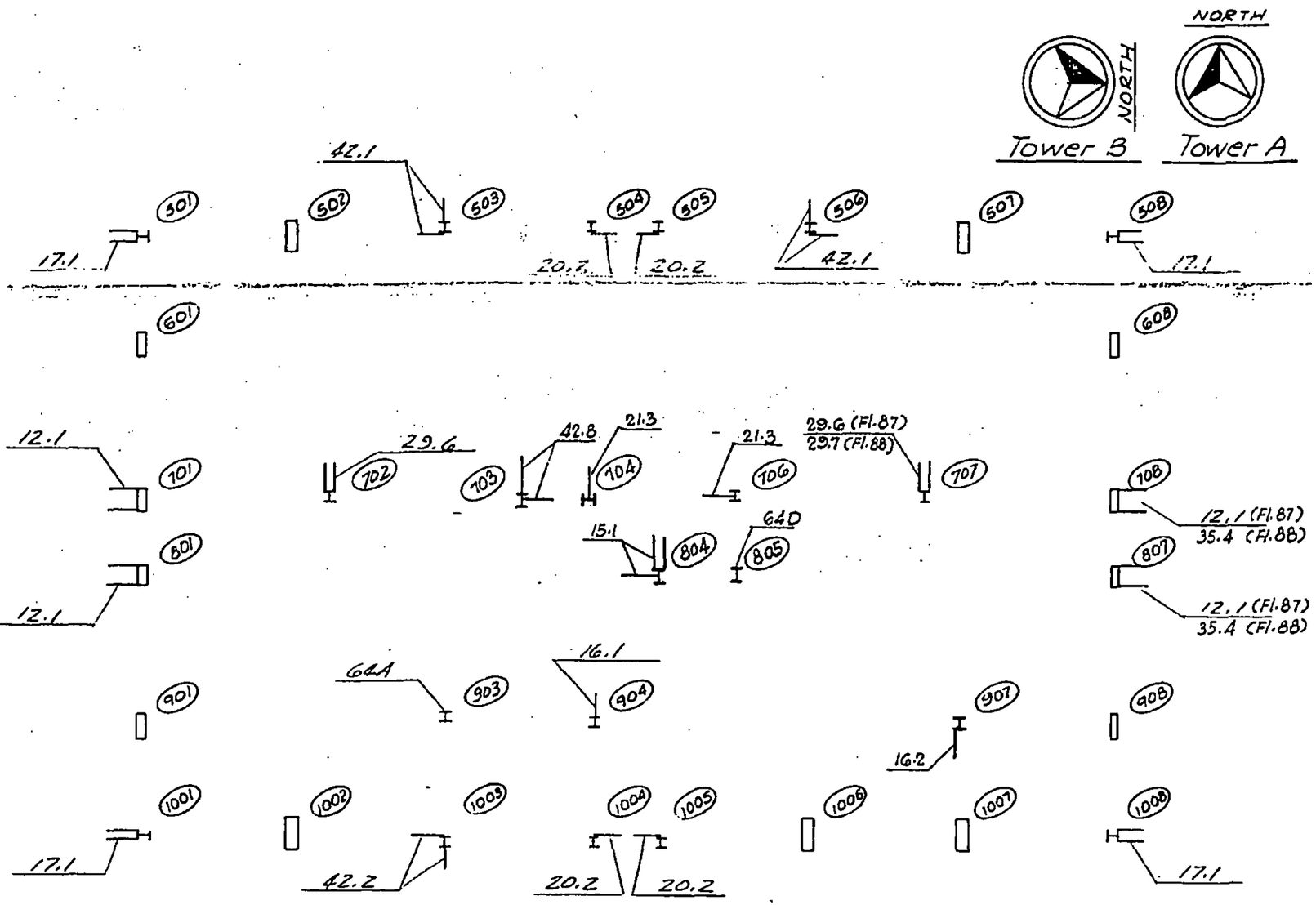

LICENSED PROFESSIONAL ENGINEER
LESLIE E. ROBERTSON
No 34360
UNIVERSITY OF THE STATE OF NEW YORK

25

DESIGNED

DRAWN J. Adams

REVIEWED W. Brewer

18-A81-51

SKILLING, HELLE, CHRISTIANSEN, ROBERTSON — Structural & Civil Engineers

PROJECT THE WORLD TRADE CENTER | TITLE KEY PLAN FOR ANCHOR STRAPS - FL 89-92 | DATE 4-30-69

REVISIONS

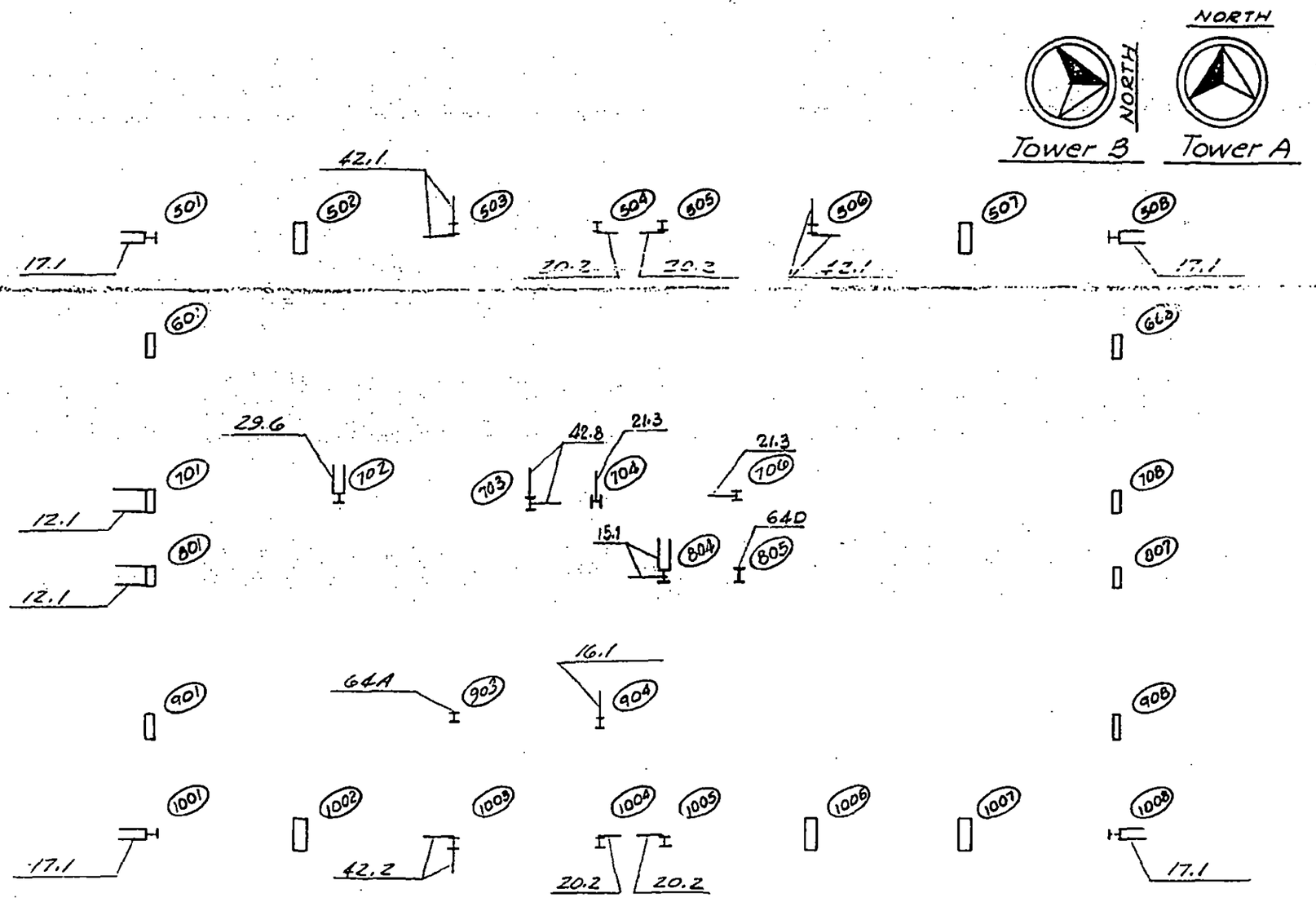

LICENSED PROFESSIONAL ENGINEER — LESLIE E. ROBERTSON — No. 34360 — UNIVERSITY OF THE STATE OF NEW YORK

24

DESIGNED

DRAWN J. Adams

REVIEWED W. Brewer

18-AB1-.52

SKILLING, HELLE, CHRISTIANSEN, ROBERTSON — Structural & Civil Engineers

PROJECT THE WORLD TRADE CENTER | TITLE KEY PLAN FOR ANCHOR STRAPS - FL 93 | DATE 4-30-69

REVISIONS

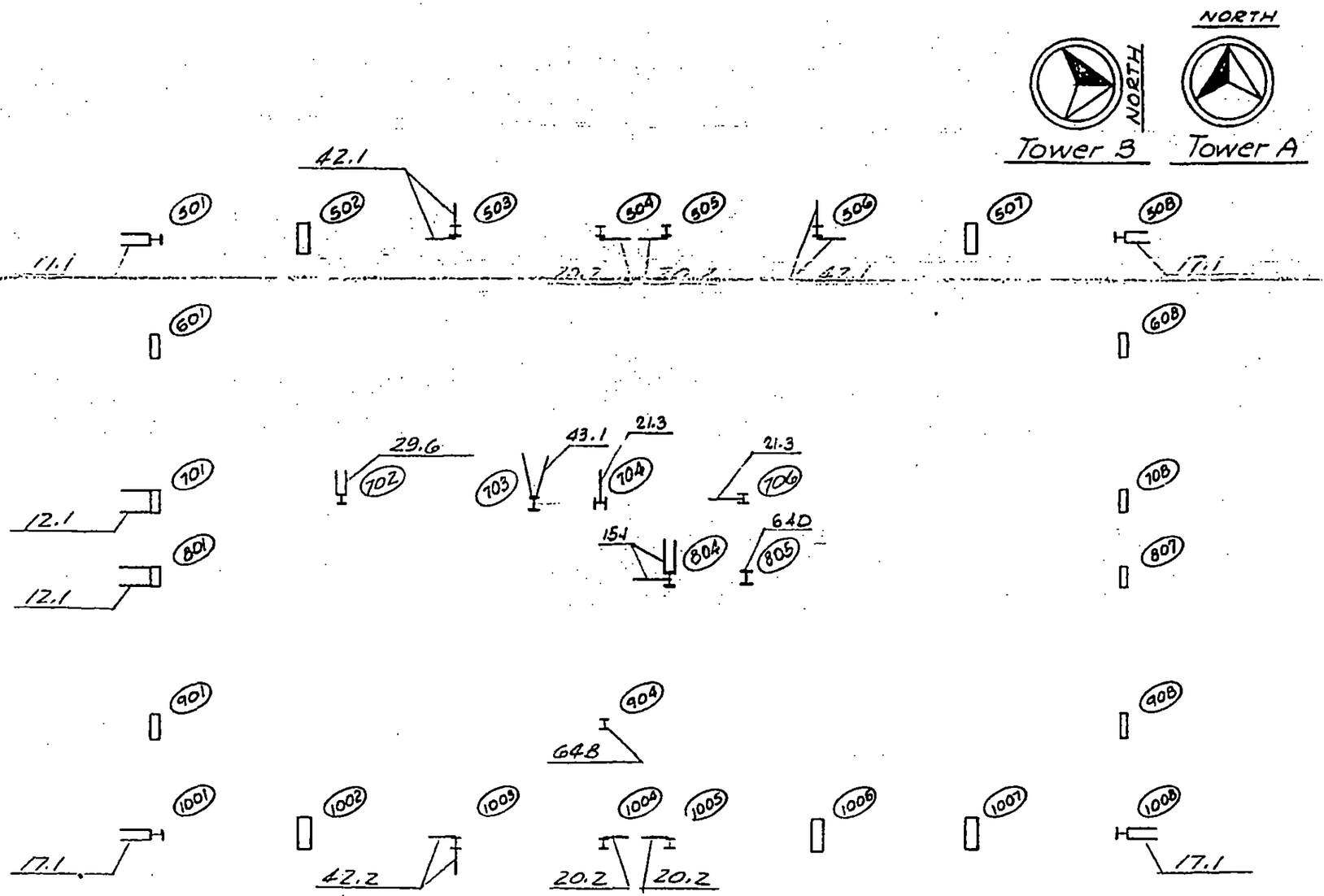

LICENSED PROFESSIONAL ENGINEER LESLIE E. ROBERTSON No. 34360 UNIVERSITY OF THE STATE OF NEW YORK

27

DESIGNED

DRAWN J. Adams

REVIEWED W. Brewer

18-AB1-53

SKILLING, HELLE, CHRISTIANSEN, ROBERTSON — Structural & Civil Engineers

PROJECT: THE WORLD TRADE CENTER | TITLE: KEY PLAN FOR ANCHOR STRAPS-FL 94 | DATE: 4-30-69

REVISIONS

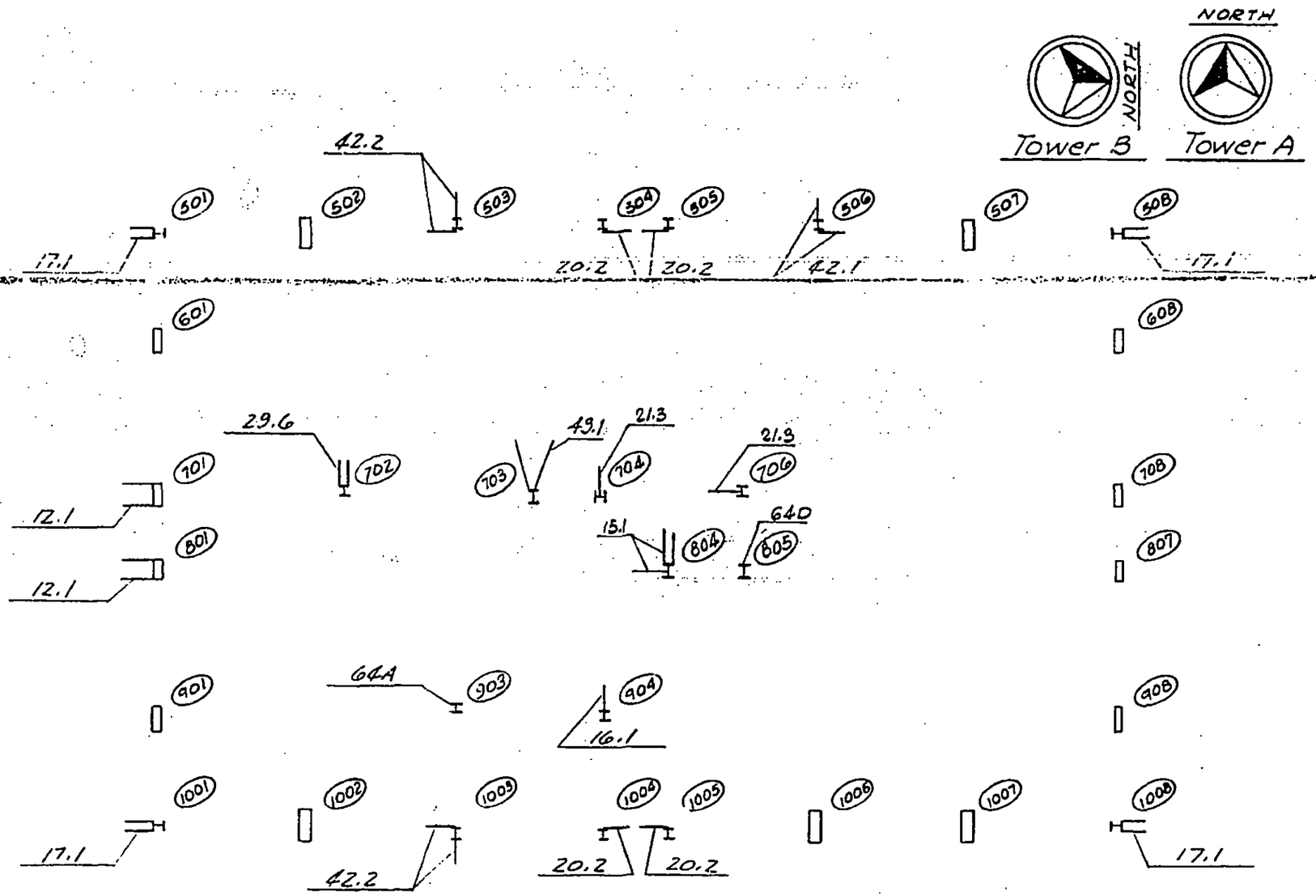

LICENSED PROFESSIONAL ENGINEER — LESLIE E. ROBERTSON — No. 34360 — UNIVERSITY OF THE STATE OF NEW YORK

2F

DESIGNED

DRAWN J. Adams

REVIEWED W. Brewer

18-A81-54

SKILLING, HELLE, CHRISTIANSEN, ROBERTSON — Structural & Civil Engineers

PROJECT THE WORLD TRADE CENTER | TITLE KEY PLAN FOR ANCHOR STRAPS - FL. 95 | DATE 4-30-69

REVISIONS

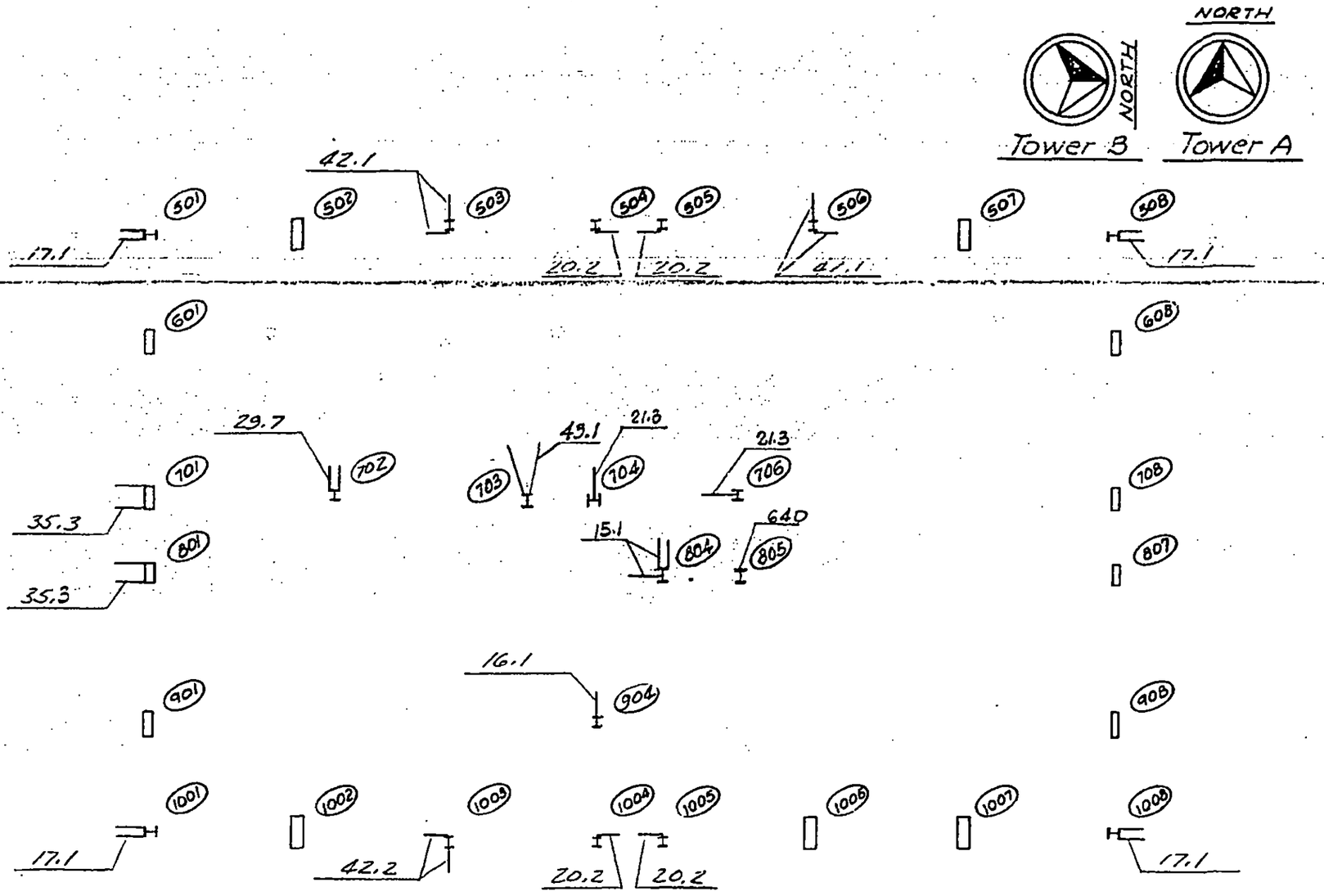

LICENSED PROFESSIONAL ENGINEER
LESLIE E. ROBERTSON
No. 34360
UNIVERSITY OF THE STATE OF NEW YORK

25

DESIGNED

DRAWN J. Adams

REVIEWED W. Brewer

18-481-55

SKILLING, HELLE, CHRISTIANSEN, ROBERTSON — Structural & Civil Engineers

PROJECT THE WORLD TRADE CENTER | TITLE KEY PLAN FOR ANCHOR STRAPS - FL 96-100 | DATE 4-30-69

REVISIONS

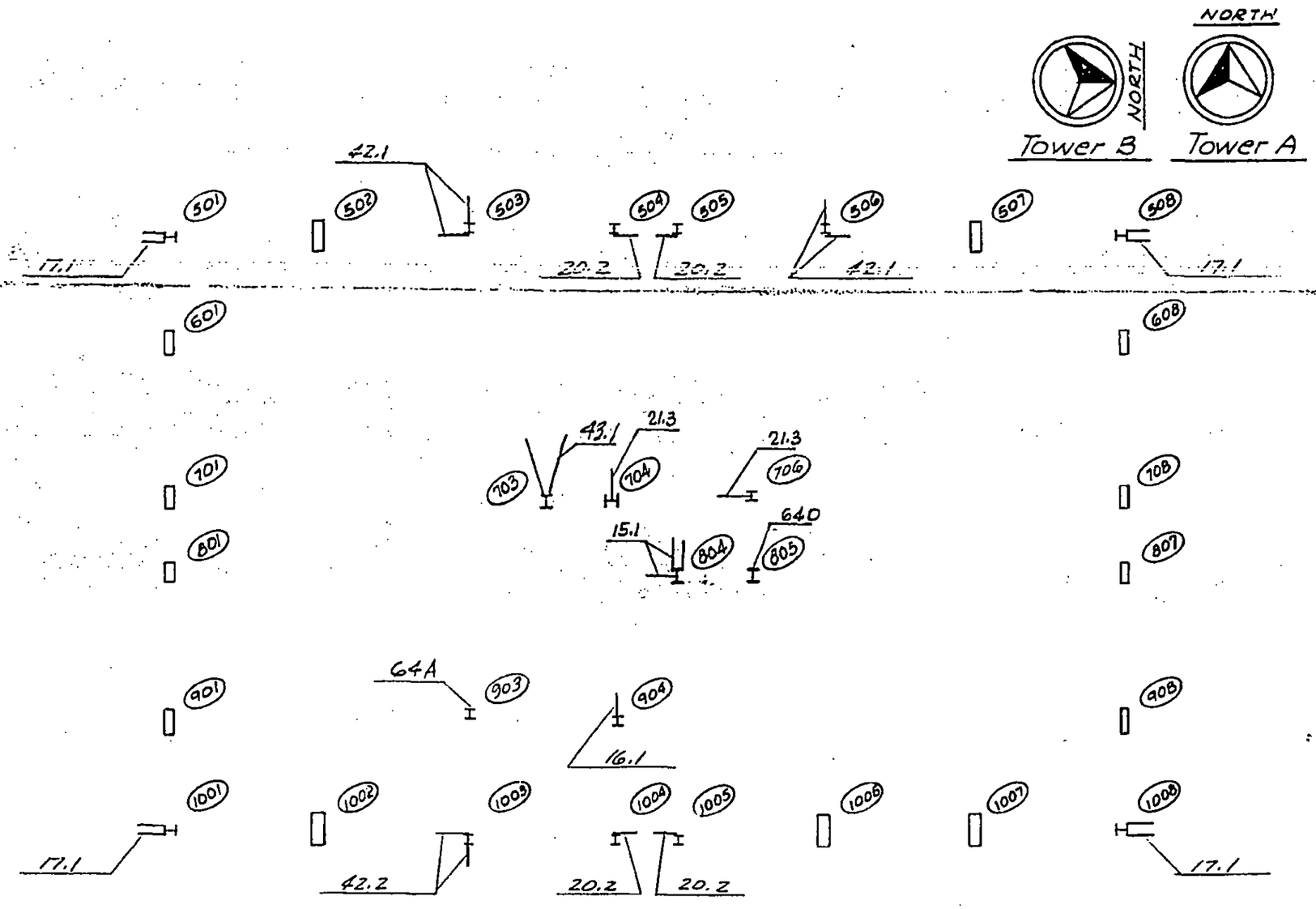

LICENSED PROFESSIONAL ENGINEER
LESLIE E. ROBERTSON
No. 34360
UNIVERSITY OF THE STATE OF NEW YORK

DESIGNED

DRAWN J. Adams

REVIEWED W. Brewer

18-A81-56

SKILLING, HELLE, CHRISTIANSEN, ROBERTSON — Structural & Civil Engineers

PROJECT THE WORLD TRADE CENTER | TITLE KEY PLAN FOR ANCHOR STRAPS- FL 101 | DATE 4-30-69

REVISIONS

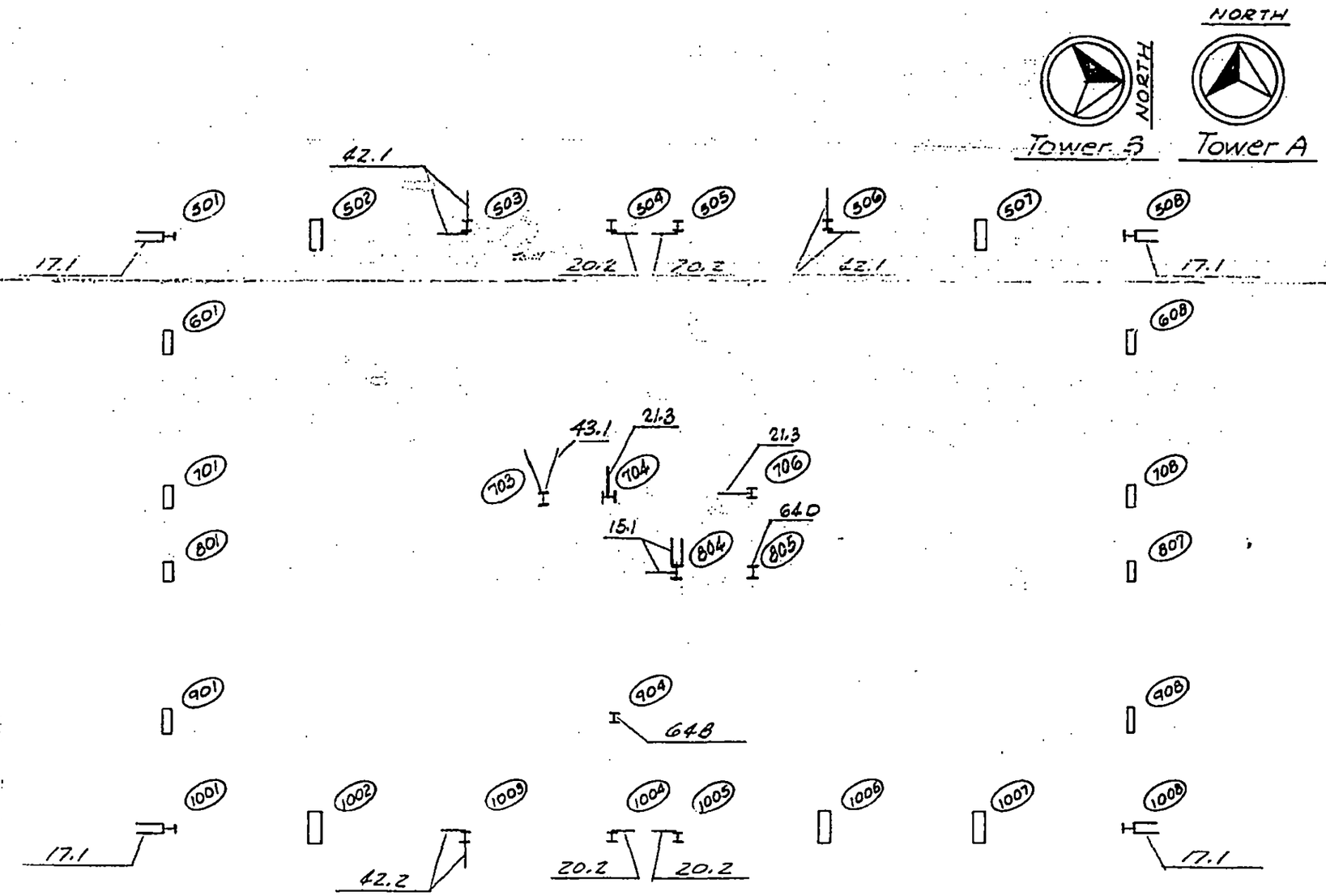

LICENSED PROFESSIONAL ENGINEER
LESLIE E. ROBERTSON
No. 34360
UNIVERSITY OF THE STATE OF NEW YORK

31

DESIGNED

DRAWN J. Adams

REVIEWED W. Brewer

18-AB1-57

SKILLING, HELLE, CHRISTIANSEN, ROBERTSON — Structural & Civil Engineers

PROJECT THE WORLD TRADE CENTER | TITLE KEY PLAN FOR ANCHOR STRAPS-FL 102-104 | DATE 4-30-69

REVISIONS

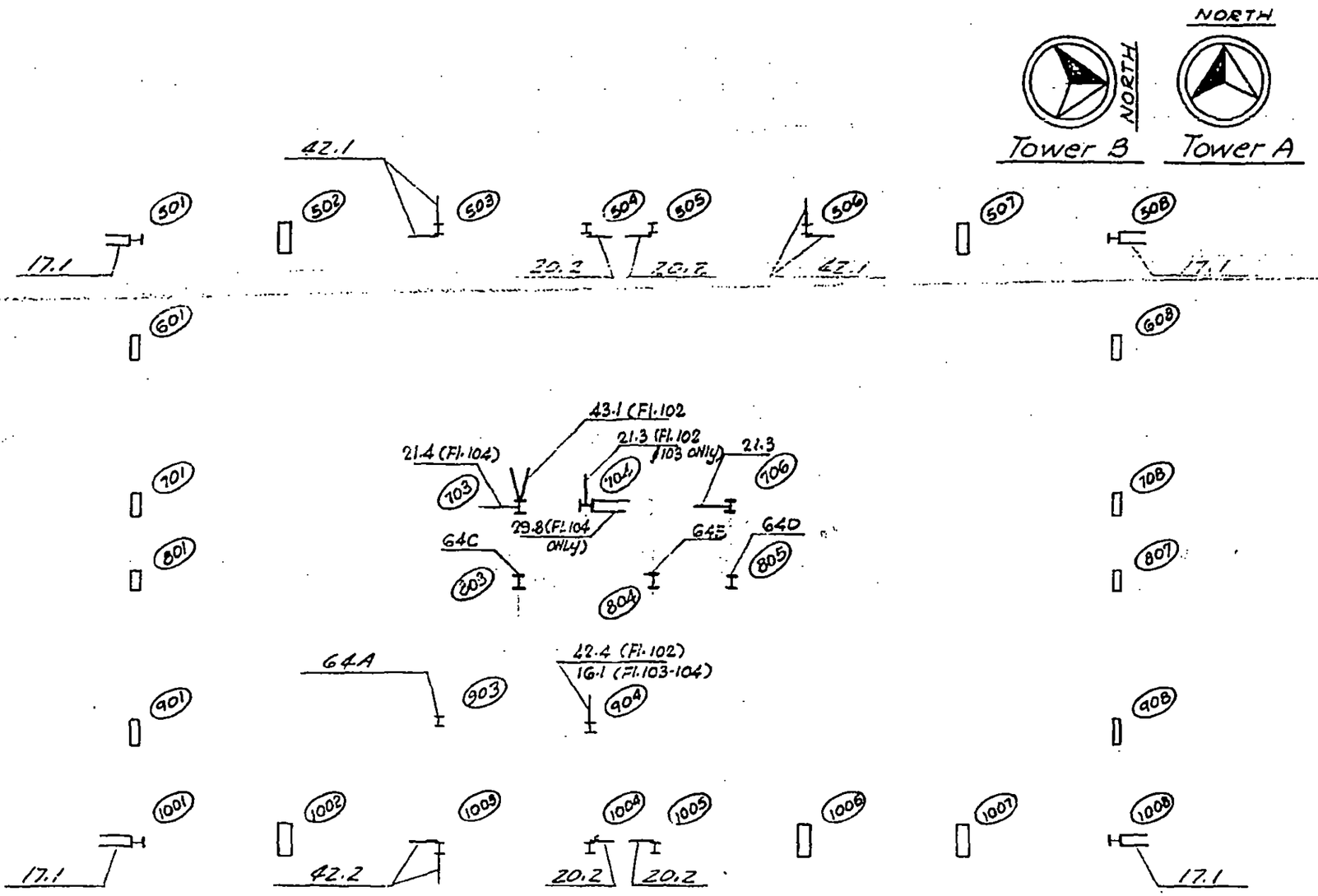

LICENSED PROFESSIONAL ENGINEER
LESLIE E. ROBERTSON
No. 34360
UNIVERSITY OF THE STATE OF NEW YORK

DESIGNED

DRAWN J. Adams

REVIEWED W. Brewer

18-AB1-58

SKILLING, HELLE, CHRISTIANSEN, ROBERTSON — Structural & Civil Engineers

PROJECT THE WORLD TRADE CENTER | TITLE KEY PLAN FOR ANCHOR STRAPS - FL 105 | DATE 7-14-69

REVISIONS

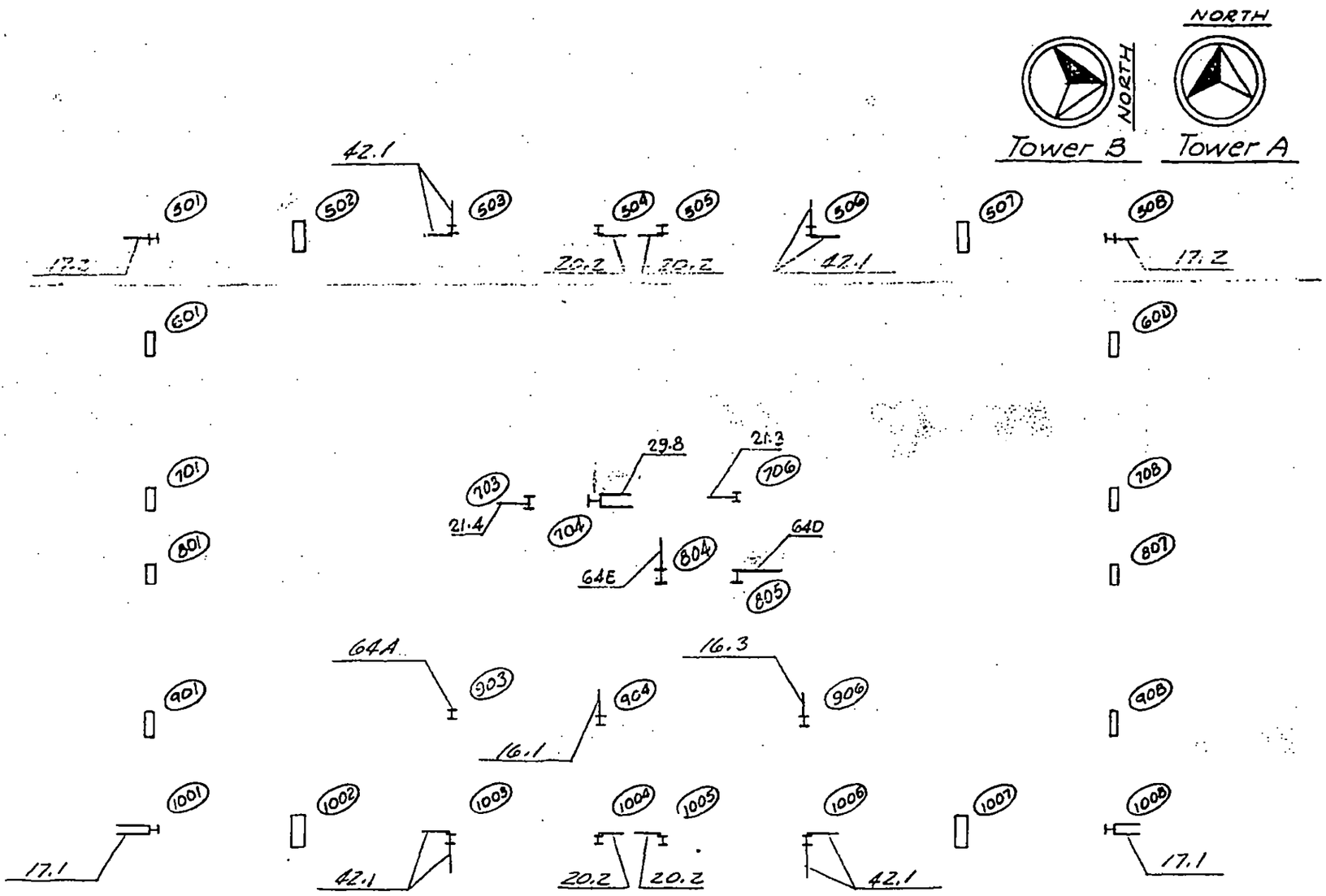

LICENSED PROFESSIONAL ENGINEER
LESLIE E. ROBERTSON
No. 34360
UNIVERSITY OF THE STATE OF NEW YORK

DESIGNED

DRAWN

REVIEWED

18-AB1-59

SKILLING, HELLE, CHRISTIANSEN, ROBERTSON — Structural & Civil Engineers

PROJECT THE WORLD TRADE CENTER | TITLE KEY PLAN FOR ANCHOR STRAPS-FL 106 | DATE 7-14-69

REVISIONS

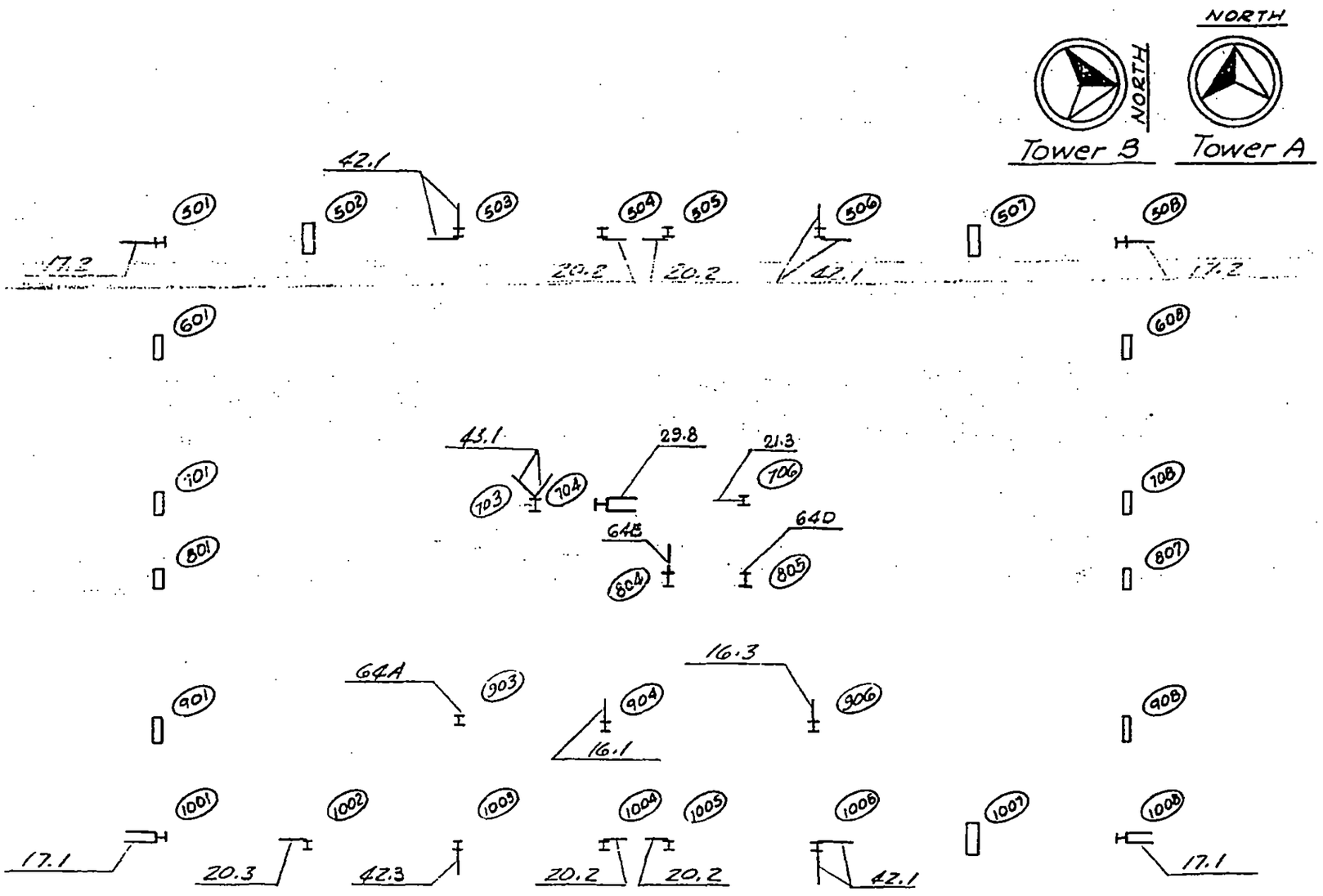

LICENSED PROFESSIONAL ENGINEER
LESLIE E. ROBERTSON
UNIVERSITY OF THE STATE OF NEW YORK
NO. 34360

DESIGNED

DRAWN

REVIEWED

18-AB1-60

SKILLING, HELLE, CHRISTIANSEN, ROBERTSON — Structural & Civil Engineers

PROJECT	TITLE	DATE
THE WORLD TRADE CENTER	ANCHOR STRAPS - CORE DETAILS - INDEX	10/ 1/69

REVISIONS

10/16/68
10/30/68
2/7/69
4/30/69
5/20/69
5/27/69

18-AB2- 1	INDEX	18-AB2-51.2	DETAIL 51B
18-AB2- 2.1	GENERAL NOTES	18-AB2-52	DETAIL 52
18-AB2- 2.2	TYPICAL DETAILS	18-AB2-53	DETAIL 53
18-AB2- 3	DETAIL 3	18-AB2-54.1	DETAIL 54A
18-AB2- 4	DETAIL 4	18-AB2-54.2	DETAIL 54B & C
18-AB2- 5	DETAIL 5	18-AB2-55	DETAIL 55
18-AB2- 6	DETAIL 6	18-AB2-56	DETAIL 56
18-AB2- 7	DETAIL 7	18-AB2-57.1	DETAIL 57AEB
18-AB2- 8	DETAIL 8	18-AB2-57.2	DETAIL 57CED
18-AB2- 9	DETAIL 9	18-AB2-57.3	DETAIL 57EGF
18-AB2-10	DETAIL 10	18-AB2-57.4	DETAIL 57GEH
18-AB2-11	DETAIL 11	18-AB2-58	DETAIL 58
18-AB2-12	DETAIL 12	18-AB2-59	DETAIL 59
18-AB2-13	DETAIL 13	18-AB2-60	DETAIL 60
18-AB2-14	DETAIL 14	18-AB2-61	DETAIL 61
18-AB2-15	DETAIL 15	18-AB2-62.1	DETAIL 62ABC
18-AB2-16	DETAIL 16	18-AB2-62.2	DETAIL 62DE
18-AB2-17	DETAIL 17	18-AB2-63	DETAIL 63
18-AB2-18	DETAIL 18	18-AB2-64.1	DETAIL 64ABCD
18-AB2-19	DETAIL 19	18-AB2-64.2	DETAIL 64EF
18-AB2-20	DETAIL 20	18-AB2-65	DETAIL 65
18-AB2-21	DETAIL 21	18-AB2-66.1	DETAIL 66AB
18-AB2-22	DETAIL 22	18-AB2-66.2	DETAIL 66CD
18-AB2-23	DETAIL 23	18-AB2-66.3	DETAIL 66EF
18-AB2-24	DETAIL 24	18-AB2-67.1	DETAIL 67AB
18-AB2-25	DETAIL 25	18-AB2-67.2	DETAIL 67CD
18-AB2-26	DETAIL 26	18-AB2-68	DETAIL 68
18-AB2-27	DETAIL 27	18-AB2-69.1	DETAIL 69
18-AB2-28	DETAIL 28	18-AB2-69.2	DETAIL 69
18-AB2-29	DETAIL 29	18-AB2-70	DETAIL 70
18-AB2-30	DETAIL 30	18-AB2-71	DETAIL 71
18-AB2-31	DETAIL 31	18-AB2-72	DETAIL 72
18-AB2-32	DETAIL 32	18-AB2-73	DETAIL 73
18-AB2-33	DETAIL 33	18-AB2-74.1	DETAIL 74
18-AB2-34	DETAIL 34	18-AB2-74.2	DETAIL 74
18-AB2-35	DETAIL 35	18-AB2-75	DETAIL 75
18-AB2-36	DETAIL 36	18-AB2-76	DETAIL 76
18-AB2-37	DETAIL 37A,B,C	18-AB2-77.1	DETAIL 77
18-AB2-38	DETAIL 38	18-AB2-77.2	DETAIL 77
18-AB2-39	DETAIL 39	18-AB2-78	DETAIL 78
18-AB2-40	DETAIL 40	18-AB2-79.1	DETAIL 79
18-AB2-41	DETAIL 41	18-AB2-79.2	DETAIL 79
18-AB2-42.1	DETAIL 42	18-AB2-80	DETAIL 80
18-AB2-42.2	DETAIL 42	18-AB2-81.1	DETAIL 81
18-AB2-42.3	DETAIL 42	18-AB2-81.2	DETAIL 81
18-AB2-43	DETAIL 43		
18-AB2-44	DETAIL 44		
18-AB2-50.1	DETAIL 50AEB		
18-AB2-50.2	DETAIL 50C,DEF		
18-AB2-51.1	DETAIL 51A		

LICENSED PROFESSIONAL ENGINEER
LESLIE E. ROBERTSON
No. 34360
UNIVERSITY OF THE STATE OF NEW YORK

SKILLING, HELLE, CHRISTIANSEN, ROBERTSON — Structural & Civil Engineers

PROJECT	TITLE	DATE
THE WORLD TRADE CENTER	STRAP ANCHOR GENERAL NOTES	10/16/68

REVISIONS

2-7-69

1. Straps and back up material to be ASTM A36.
2. All welding to be with E70xx low hydrogen electrodes.
3. Back up material for complete penetration welding not to exceed 1" x ¼".
4. Stud lengths *see table A*
5. Straps rest on steel framing members unless noted (±), measured from reference floor line to top of strap.
6. Strap notation — strap / studs / strap elevation: 6 x ½ x 2-7½ / 3 x 5/¾ / (-6½) =

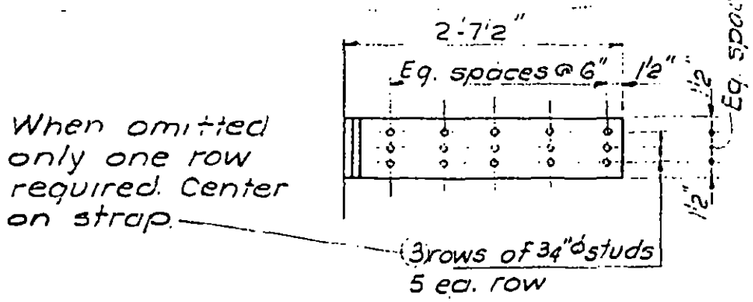

Table A		
Stud Size	Stud length	Shop Dwg Stud Designation
½	2	R 420
⅝	2½	R 524
¾	3	R 630
⅞	3½	R 734

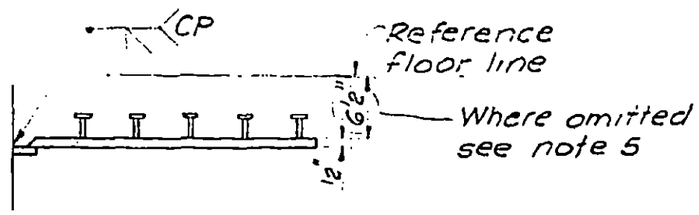

7. See 18-AB1 for Key Plans.

LICENSED PROFESSIONAL ENGINEER — LESLIE E. ROBERTSON — No. 34360 — UNIVERSITY OF THE STATE OF NEW YORK

DESIGNED
DRAWN S Wexler
REVIEWED W. Brewer

18-AB2-2.1

SKILLING, HELLE, CHRISTIANSEN, ROBERTSON — Structural & Civil Engineers

PROJECT: THE WORLD TRADE CENTER | TITLE: STRAP ANCHORS - CORE - TYPICAL DETAILS | DATE: 10/30/68

REVISIONS

12-13-68
2-7-69
4-30-69

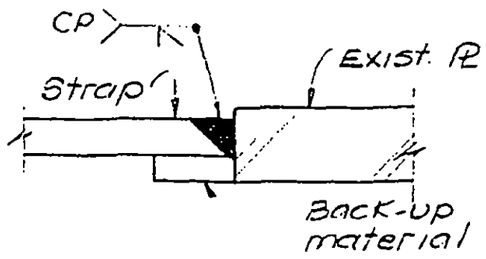

Section a-a

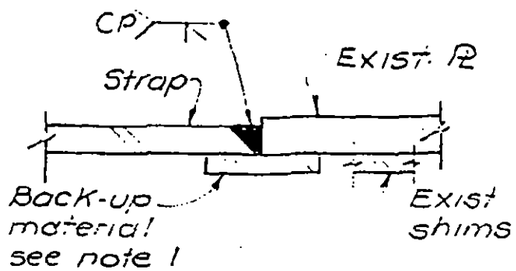

Section b-b

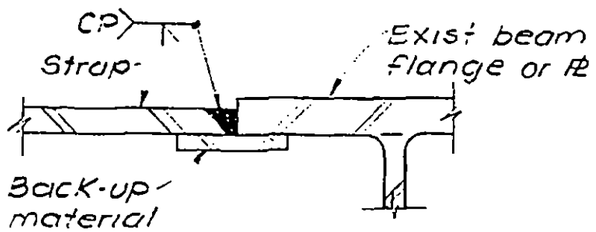

Section c-c

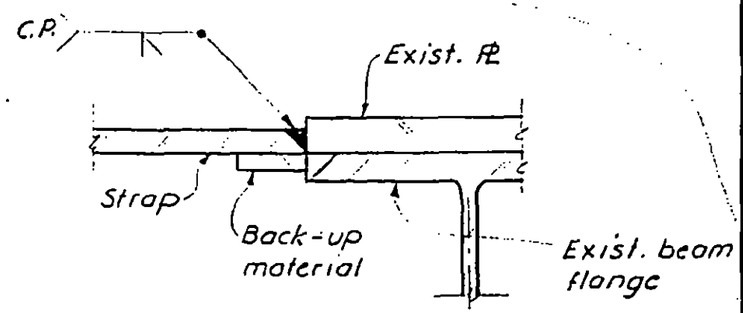

Section d-d

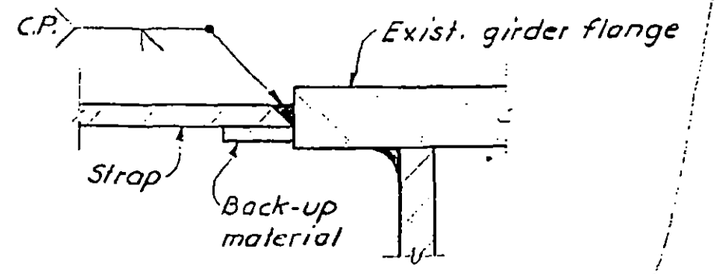

Section e-e

Notes:

1. Back-up material in Section b-b should be shipped loose and field attached to suit existing clearances.

LICENSED PROFESSIONAL ENGINEER — LESLIE E. ROBERTSON — No. 34360 — UNIVERSITY OF THE STATE OF NEW YORK

DESIGNED: [signature]
DRAWN: S. Wexler
REVIEWED: W. Brewer

18-AB2-2.2

SKILLING, HELLE, CHRISTIANSEN, ROBERTSON — Structural & Civil Engineers

PROJECT THE WORLD TRADE CENTER | TITLE STRAP ANCHORS - CORE - DETAIL 3 | DATE 10/16/68

REVISIONS

10-30-68
12-13-68
4-30-69
5-20-69
5-28-69
10-1-69

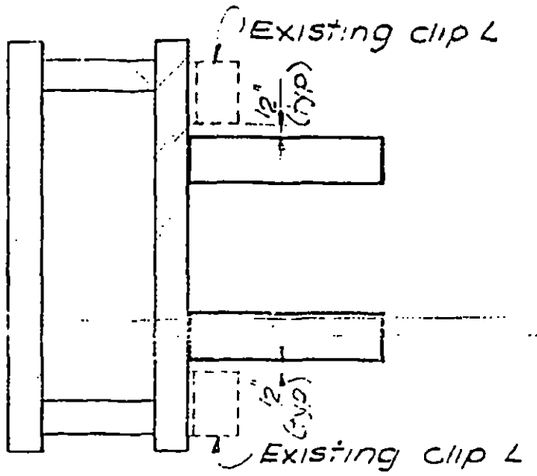

TYPE A

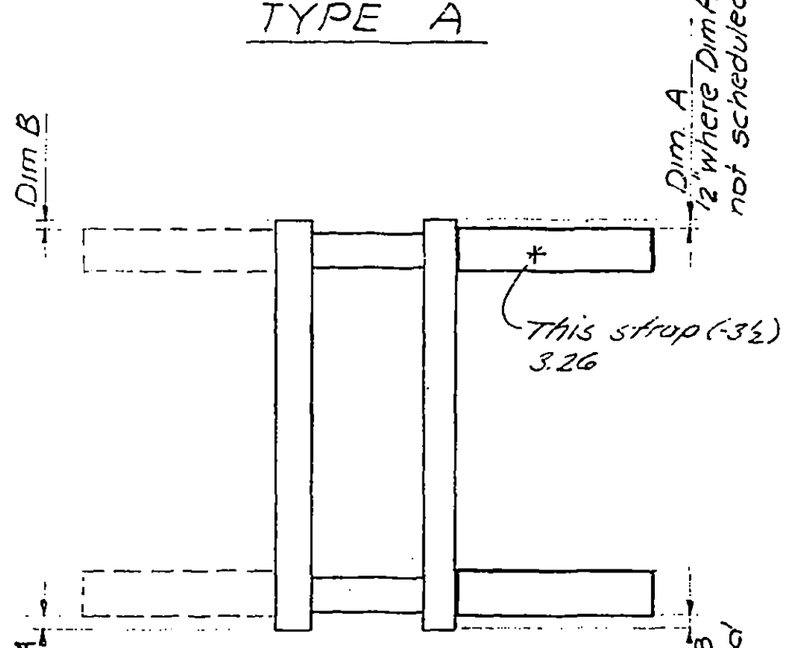

TYPE B

See Note 6 - 18-AB2-2

Detail Nº	Strap	Studs	Elev	Dim A	Dim B	Type
3.1	4"x½"x2-½"	4/3/4	(-9¾)	—	—	A
3.2	4x½x1-7½	3/3/4	(-9¾)	—	—	A
3.3	3x⅜x1-7½	3/5/8	(-4)	—	—	B
3.4	3x⅜x1-7½	3/5/8	(-4½)	—	—	B
3.5	6x½x2-1½	4/1/8	(-4)	—	1½	B
3.6	3x⅜x1-7½	3/5/8	—	—	—	A
3.7	4x⅜x2-1½	4/5/8	(-3⅜)	—	—	A
3.8	6x½x2-7½	2x5/5/8	(-3¼)	1'-3½"	10	B
3.9	4x½x2-7½	5/5/8	(-3¼)	—	—	A
3.10	4x¾x4-1½	8/5/8	(-3)	—	—	A
3.11	6x¾x3-7½	2x7/5/8	(-3)	—	—	A
3.12	4x⅜x2-1½	4/5/8	—	—	—	A
3.13	4x¾x4-1½	8/5/8	—	—	—	A
3.14	4x½x2-1½	4/3/4	(-7)	—	—	A
3.15	4x½x1-7½	3/3/4	—	—	—	A
3.16	4x⅝x2-1½	4/7/8	—	—	—	A
3.17	4x½x3-6	6/5/8	(-3½)	—	—	B
3.18	8x½x4-6	8/3/4	(-3½)	—	—	B
3.19	4x½x3-6	6/5/8	(-5¾)	—	—	A
3.20	4x½x3-6	6/5/8	(-3½)	—	—	A
3.21	4x¾x3-0	5/3/4	(-3¾)	—	—	B
3.22	4x½x2-6	4/3/4	(-4)	—	—	B
3.23	4x½x2-6	4/3/4	(-7½)	—	—	B
3.24	4x¾x4-1½	8/5/8	(-3)	—	—	A
3.25	10x½x3-6	2x6/3/4	(-4)	—	—	B
3.26	10x½x3-6	2x6/3/4	(-4)/(-3½)*	—	—	B
3.27	4x½x3-6	2x6/7/8	(-3¼)	—	—	A
3.28	3x⅜x1'-7½"	3/5/8	(-7⅝)	—	—	B
3.29	5x¾x3'-6"	6/7/8	(-5¼)	—	—	B
3.30	4x½x3-6	6/7/8	(-5½)	—	½	B
3.31	8x½x3'-0"	2x5/3/4	(-3½)	—	—	B

18-AB2-3

LICENSED PROFESSIONAL ENGINEER — LESLIE E. ROBERTSON — No. 34360 — UNIVERSITY OF THE STATE OF NEW YORK

34

DESIGNED W. Brewer

DRAWN S. Wexler

REVIEWED W. Brewer

SKILLING, HELLE, CHRISTIANSEN, ROBERTSON — Structural & Civil Engineers

PROJECT: THE WORLD TRADE CENTER | TITLE: STRAP ANCHORS - CORE - DETAIL 4 | DATE: 10/30/68

REVISIONS

12-13-68
4-30-69
5-20-69
10-1-69

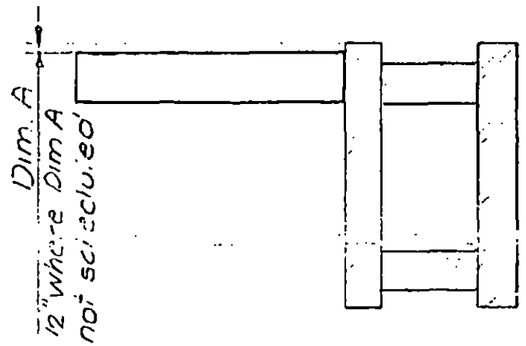

See Note 6 - 18-AB2-2				
Detail Nº	Strap	Studs	Elev	Dim. A
4.1	4"x1/2"x2'-1 1/2	4/3/4	—	—
4.2	3x3/8x1-7 1/2	3/5/8	(-4 3/8)	—
4.3	5x3/4x5-1 1/2	10/5/8	(-3)	10"
4.4	4x1/2x3-5	7/5/8	(-5 3/4)	2
4.5	3x3/8x1-7 1/2	3/5/8	(-6 1/8)	—
4.6	3x1/2x2-1 1/2	4/3/4	(-6 1/2)	—
4.7	3x3/8x1-7 1/2	3/5/8	(-3 5/8)	—
4.8	3x1/2x2-7 1/2	5/5/8	(-4)	—
4.9	4x1/2x1-7 1/2	3/3/4	(-7 1/2)	—
4.10	3x3/4x2-1 1/2	4/3/4	(-7 1/4)	—
4.11	3x3/8x1-7 1/2	3/5/8	(-4)	5
4.12	3x3/8x1-7 1/2	3/5/8	(-7 5/8)	—
4.13	6x1/2x3'-1 1/2"	6/3/4	(-4)	—
4.14	4x1/2x2'-1 1/2"	4/3/4	(-3 1/2)	—
4.15	3x3/8x2'-1 1/2"	4/5/8	(-4 1/8)	—
4.16	3x3/8x2'-1 1/2"	4/5/8	(-6 5/8)	—
4.17	4x1/2x2-6	4/3/4	(-5 1/2)	—
4.18	4x1/2x3'-5"	7/5/8 *	(-5 3/4)	1"
4.19	6x1/2x5'-0"	2x5/5/8	(-3)	1"

* @ 5 1/2"

LICENSED PROFESSIONAL ENGINEER
LESLIE E. ROBERTSON
No. 34360
UNIVERSITY OF THE STATE OF NEW YORK

35

DESIGNED: L. O'Neill

DRAWN: S. Wexler

REVIEWED: W. Brewer

18-AB2-4

SKILLING, HELLE, CHRISTIANSEN, ROBERTSON — Structural & Civil Engineers

PROJECT THE WORLD TRADE CENTER | TITLE STRAP ANCHORS - CORE - DETAIL 5 | DATE 10/30/68

REVISIONS

4-30-69
5-20-69
5-28-69

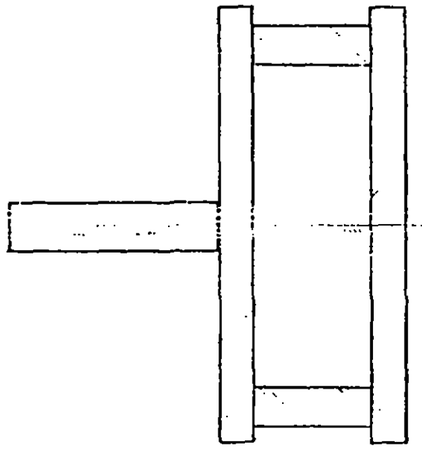

TYPE A

See Note 6 18AB2-2

Detail N°	Strap	Studs	Elev	Type	Dimen "A"
5.1	21x½x1-1½	4x2/¾	—	A	—
5.2	27x¾x2-1½	5x4/⅝	(-3)	A	—
5.3	4x⅜x2-1½	4/⅝	(-4⅛)	A	—
5.4	10x½x3-1½	3x6/⅜	(-2⅜)	A	—
5.5	3x⅜x1-6	3/⅝	(-4⅛)	A	—
5.6	21x¾x3-7½	4x7/⅝	(-3)	C	1"
5.7	21x¾x3-7½	4x7/⅝	(-3)	B	1"
5.8	4x½x2'0"	3/¾	(-7½)	A	-

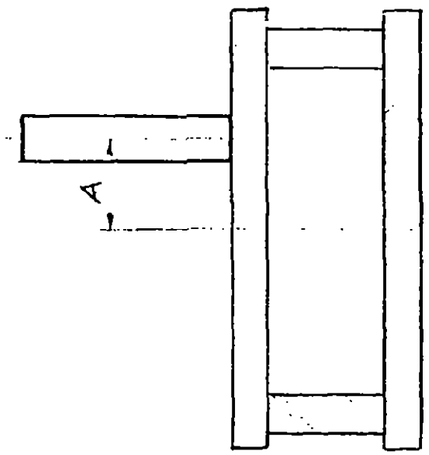

TYPE B

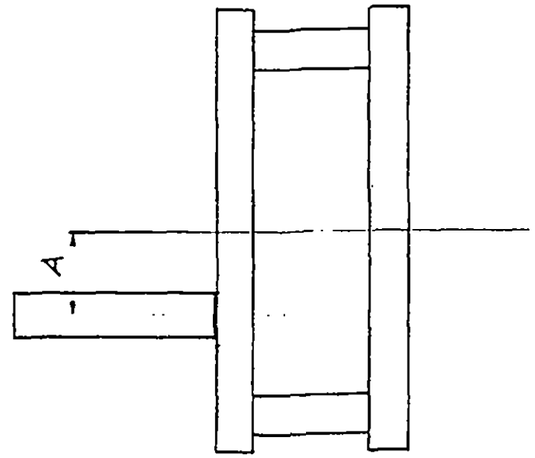

TYPE C

LICENSED PROFESSIONAL ENGINEER — LESLIE E. ROBERTSON — No. 34360 — UNIVERSITY OF THE STATE OF NEW YORK

DESIGNED [illegible]
DRAWN S Wexler
REVIEWED W. Brewer

18-AB2-5

SKILLING, HELLE, CHRISTIANSEN, ROBERTSON — Structural & Civil Engineers

PROJECT THE WORLD TRADE CENTER | TITLE STRAP ANCHORS - CORE - DETAIL 6 | DATE 4/30/69

REVISIONS

Detail No.	Strap	Studs	
6.1	4"x½"x 4'-1"	⅝"ϕ	(-3½)

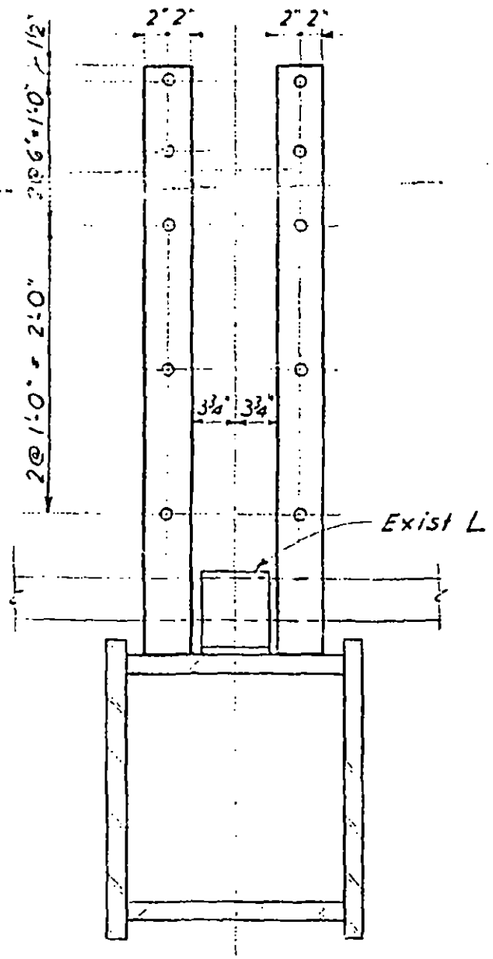

LICENSED PROFESSIONAL ENGINEER
LESLIE E. ROBERTSON
No. 34360
UNIVERSITY OF THE STATE OF NEW YORK

37

DESIGNED

DRAWN F. Smith

REVIEWED W. Brewer

18-AB2-6

SKILLING, HELLE, CHRISTIANSEN, ROBERTSON — Structural & Civil Engineers

PROJECT THE WORLD TRADE CENTER | TITLE STRAP ANCHORS - CORE - DETAIL 7 | DATE 10/30/68

REVISIONS

12-13-68
5-20-69
5-28-69
10-1-69

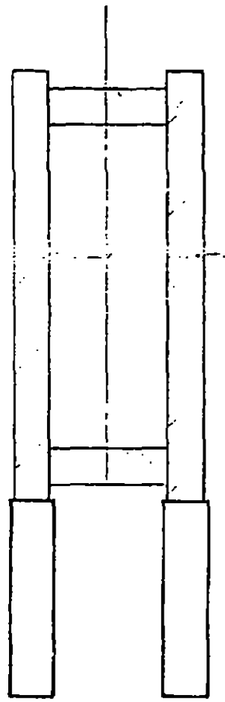

See Note 6 - 18-AB2-2

Detail No	Strap	Studs	Elev
7.1	5"x1/2"x3'-7 1/2	7/5/8	(-3 1/4)
7.2	3x3/8x1-7 1/2	3/3/4	—
7.3	3x1/2x2-1 1/2	4/5/8	—
7.4	5x5/8x4-1 1/2	8/5/8	(-3 1/8)
7.5	4 1/2x3/4x4-7 1/2	9/5/8	(-3)
7.6	4x5/8x3-7 1/2	7/5/8	(-3 1/8)
7.7	5x3/4x5-1 1/2	10/5/8	(-3)
7.8	3x3/8x1-6 1/2	3/5/8	—
7.9	4x3/4x3-0	5/3/4	(-7 1/2)
7.10	3x1/2x1'-7 1/2"	3/3/4	—
7.11	5x3/4x4'-0"	7/7/8	—
7.12	6x5/8x4'-0"	2x7/5/8	(-3 3/8)

LICENSED PROFESSIONAL ENGINEER
LESLIE E. ROBERTSON
No. 34360
LICENSED BY THE STATE OF NEW YORK

DESIGNED
[illegible]
DRAWN
S. Wexler
REVIEWED
W. Brewer

18-AB2-7

SKILLING, HELLE, CHRISTIANSEN, ROBERTSON — Structural & Civil Engineers

PROJECT THE WORLD TRADE CENTER | TITLE STRAP ANCHORS - CORE - DETAIL 8 | DATE 10/16/68

REVISIONS

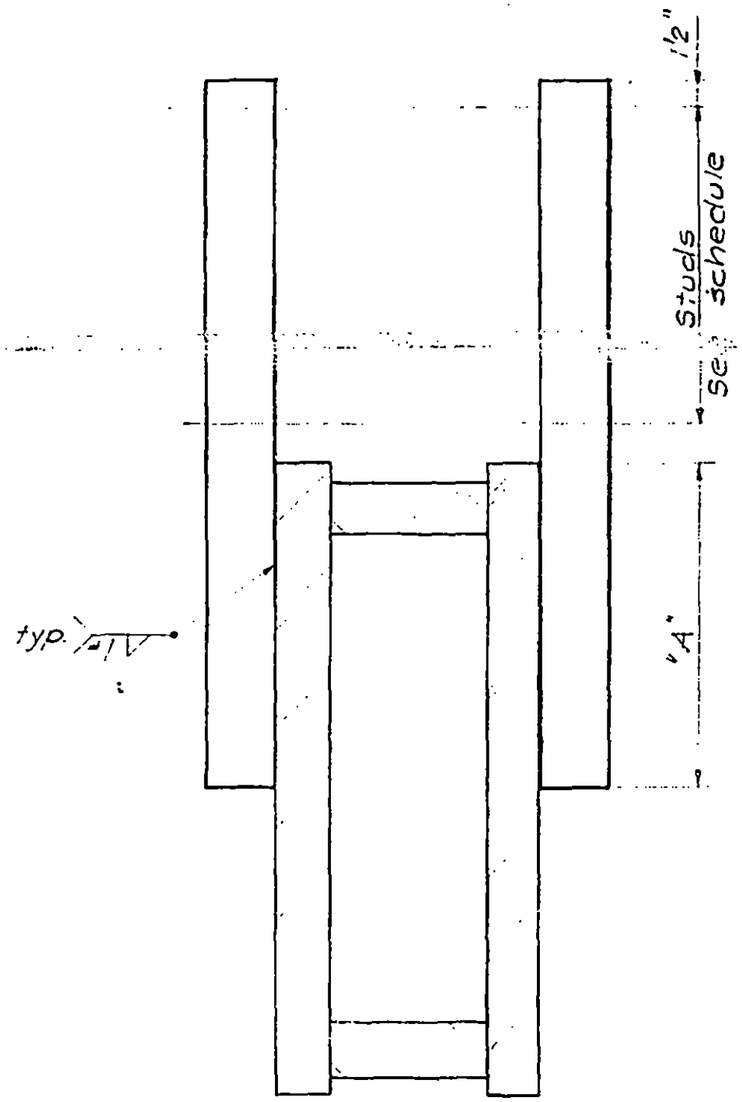

See Note 6 18-AB2-2					
Detail No.	Strap	Studs	Elev	Dimen "A"	Weld No. 1
8.1	6"x⅞"x4'-10½	2x5/¾	—	2'-3"	½
8.2	4x⅞x5-1½	7/¾	—	1-6	½

LICENSED PROFESSIONAL ENGINEER
LESLIE E. ROBERTSON
No. 34360
UNIVERSITY OF THE STATE OF NEW YORK

DESIGNED
[illegible]

DRAWN
S. Wexler

REVIEWED
W. Brewer

18-AB2-8

SKILLING, HELLE, CHRISTIANSEN, ROBERTSON — Structural & Civil Engineers

PROJECT THE WORLD TRADE CENTER | TITLE STRAP ANCHORS · CORE - DETAIL 9 | DATE 10/30/68

REVISIONS

12/12/68
5-20-69
5-28-69
10-1-69

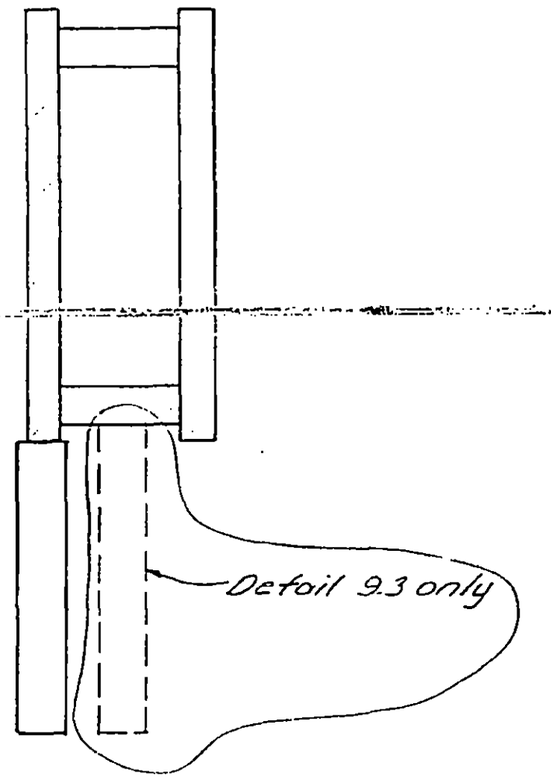

See Note 6 18-AB2-2

Detail N°	Strap	Studs	Elev
9.1	3"x3/4"x2'-7½	5|3/4	(-3 3/4)
9.2	3x3/4x4'-4½	8|5/8	(-4)
9.3	3"x3/4"x4'-2	5|7/8	(-3 2)
9.4	3x3/4x3-0	5|5/8	(-7)
9.5	3x3/4x3-6	6|3/4	(-7)

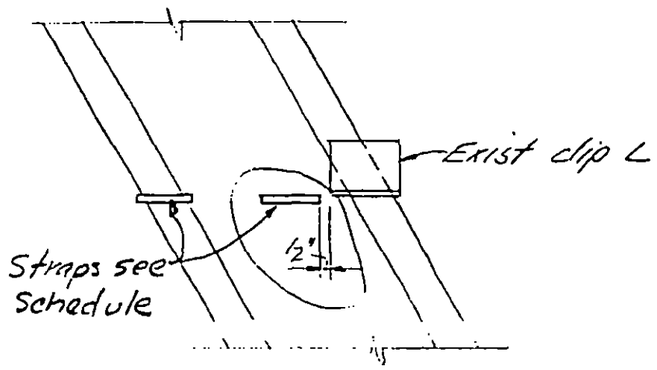

Elev. 9.3

LICENSED PROFESSIONAL ENGINEER — LESLIE E. ROBERTSON — No. 34360 — UNIVERSITY OF THE STATE OF NEW YORK

DESIGNED J. O'Neill
DRAWN S. Wexler
REVIEWED W. Brewer

18-AB2-9

SKILLING, HELLE, CHRISTIANSEN, ROBERTSON — Structural & Civil Engineers

PROJECT THE WORLD TRADE CENTER | TITLE STRAP ANCHORS - CORE - DETAIL 10 | DATE 10-16-68

REVISIONS

2-7-69

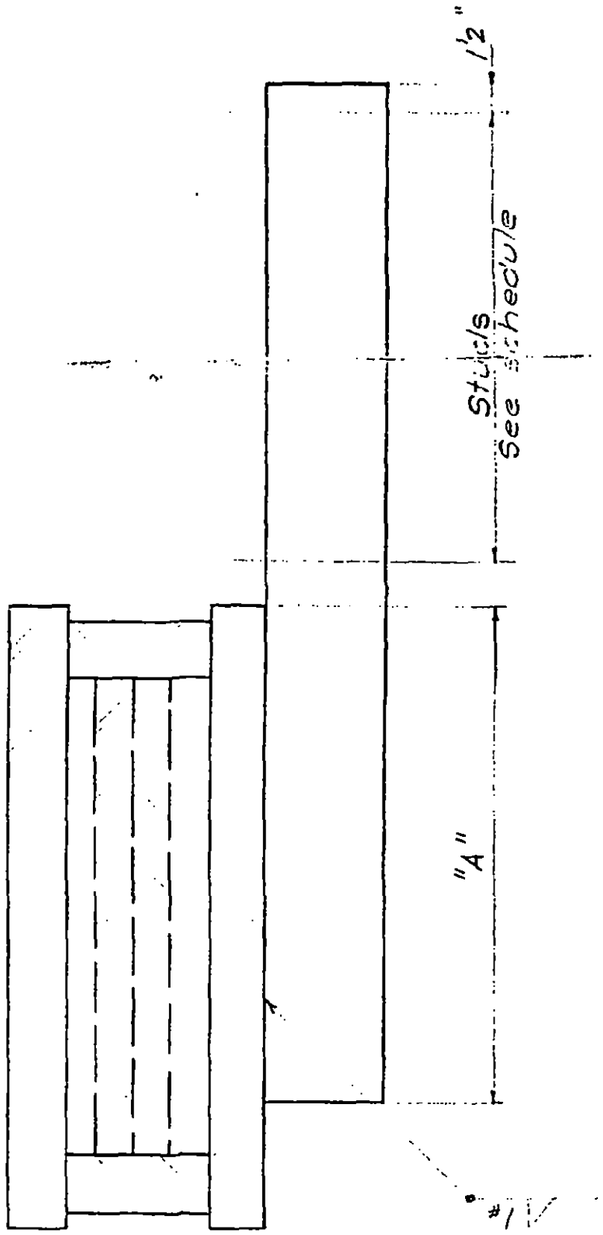

See Note G 18-AB2-2

Detail No.	Strap	Studs	Elev.	Dimen "A"	Weld #1
10.1	11"x1"x7'-11½"	3x7/3/4	—	4'-4"	12
10.2	7x1x5'-1½"	2x7/3/4	—	2'-6	58

* Longitudinal spacing 4½"

LICENSED PROFESSIONAL ENGINEER
LESLIE E. ROBERTSON
No. 34360
UNIVERSITY OF THE STATE OF NEW YORK

DESIGNED

DRAWN S. Wexler

REVIEWED W. Brewer

18-AB2-10

SKILLING, HELLE, CHRISTIANSEN, ROBERTSON — Structural & Civil Engineers

PROJECT THE WORLD TRADE CENTER | TITLE STRAP ANCHORS-CORE - DETAIL 11 | DATE 10/30/68

REVISIONS

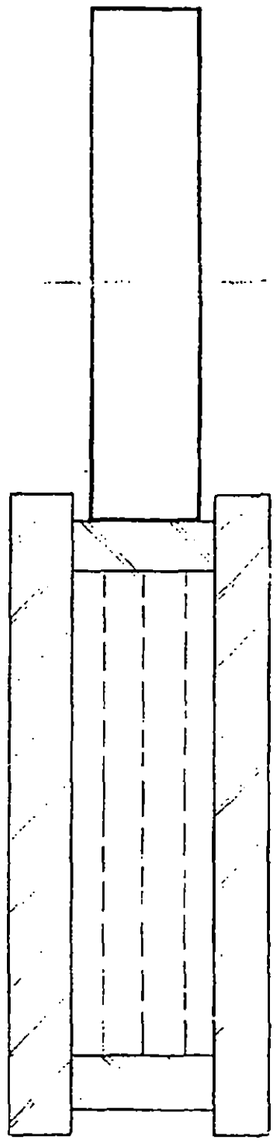

See Note 6 - 18-AB2-2			
Detail No	Strap	Studs	Elev
11.1	10" x 3/4" x 3'-0"	3 x 7/8	—
—			

LICENSED PROFESSIONAL ENGINEER
LESLIE E. ROBERTSON
No. 34360
OF THE STATE OF NEW YORK

DESIGNED
L. E. Robertson

DRAWN
S. Wexler

REVIEWED

18-AB2-11

SKILLING, HELLE, CHRISTIANSEN, ROBERTSON — Structural & Civil Engineers

PROJECT: THE WORLD TRADE CENTER | TITLE: STRAP ANCHORS - CORE - DETAIL 12 | DATE: 2-7-69

REVISIONS

4-30-69

10-1-69

See Note 6 18-AB 2-2

Detail No.	Strap	Studs	Elev.	Dim. A	Spacing "X"
12.1	4"×½"×4'-6"	⅝"	(-3½)	—	10"
12.2	4"×½"×4'-6"	⅝"	(-3½)	5"	10"
12.3	4"×½"×4'-6"	⅝"	(-3½)	4½"	10"
12.4	4"×1'½"×3'-9½"	⅝"	(-3½)	—	8"
12.5	4"×½"×3'-9½"	⅝"	(-3½)	5"	8"
12.6	4"×½"×3'-9½"	⅝"	(-4¼)	—	8"
12.7	4"×½"×3'-9½"	⅝"	(-3½)	6½"	8"
12.8	4"×½"×3'-9½"	⅝"	(-3½)	9½"	8"
12.9	4×½×4'-6"	⅝"	(-3½)	6½"	10"

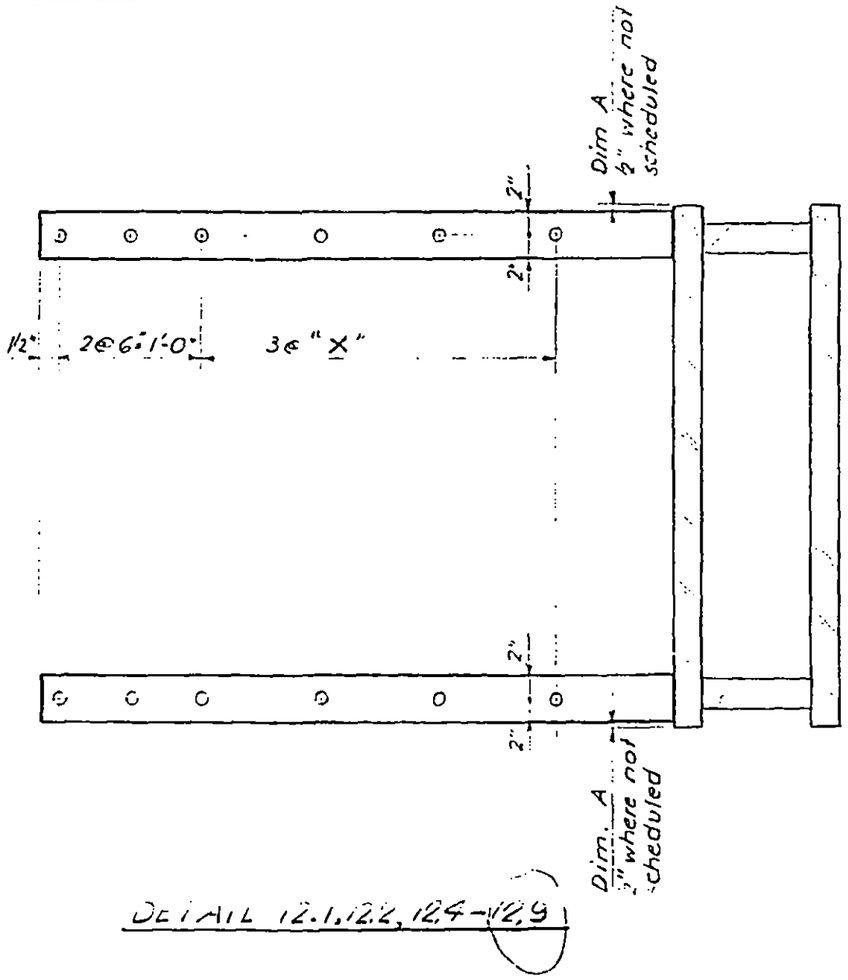

DETAIL 12.1, 12.2, 12.4-12.9

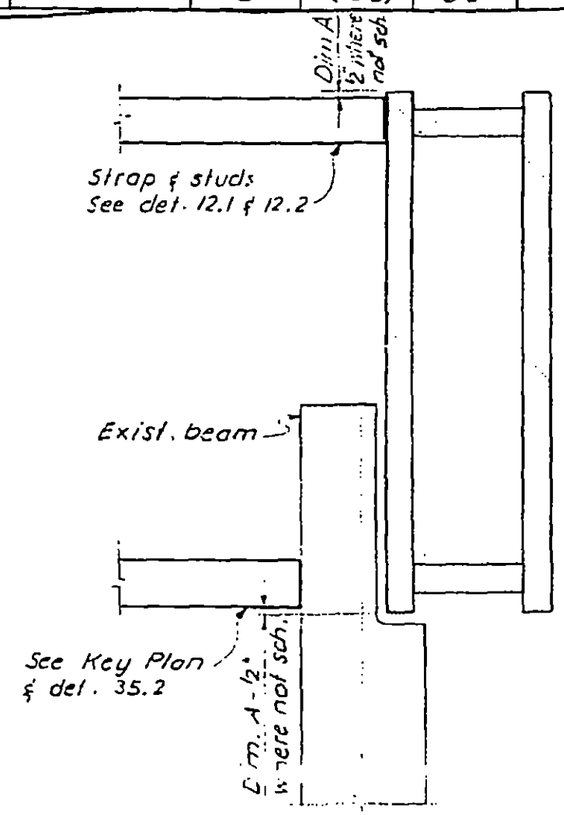

DETAIL 12.3

LICENSED PROFESSIONAL ENGINEER
LESLIE E. ROBERTSON
No. 34360
UNIVERSITY OF THE STATE OF NEW YORK

DESIGNED
F. Smith

DRAWN
F. Smith

REVIEWED
W. Brewer

18-AB 2-12

SKILLING, HELLE, CHRISTIANSEN, ROBERTSON — Structural & Civil Engineers

PROJECT THE WORLD TRADE CENTER | TITLE STRAP ANCHOR - CORE - DETAIL 13 | DATE 2-7-69

REVISIONS

4-30-69
10-1-69

See Note 6 18-AB2-2

Detail No.	Strap	Studs	Elev.	Spacing "X"
13.1	8"x½"x 4'-6"	¾"	(-3½)	8"
13.2	6"x½"x 4'-6"	⅝"	(-3½)	8"
13.3	8"x½"x3'-9½"	¾"	(-3½)	7"
13.4	6"x½"x4'-6"	⅝"	(-3½)	8"

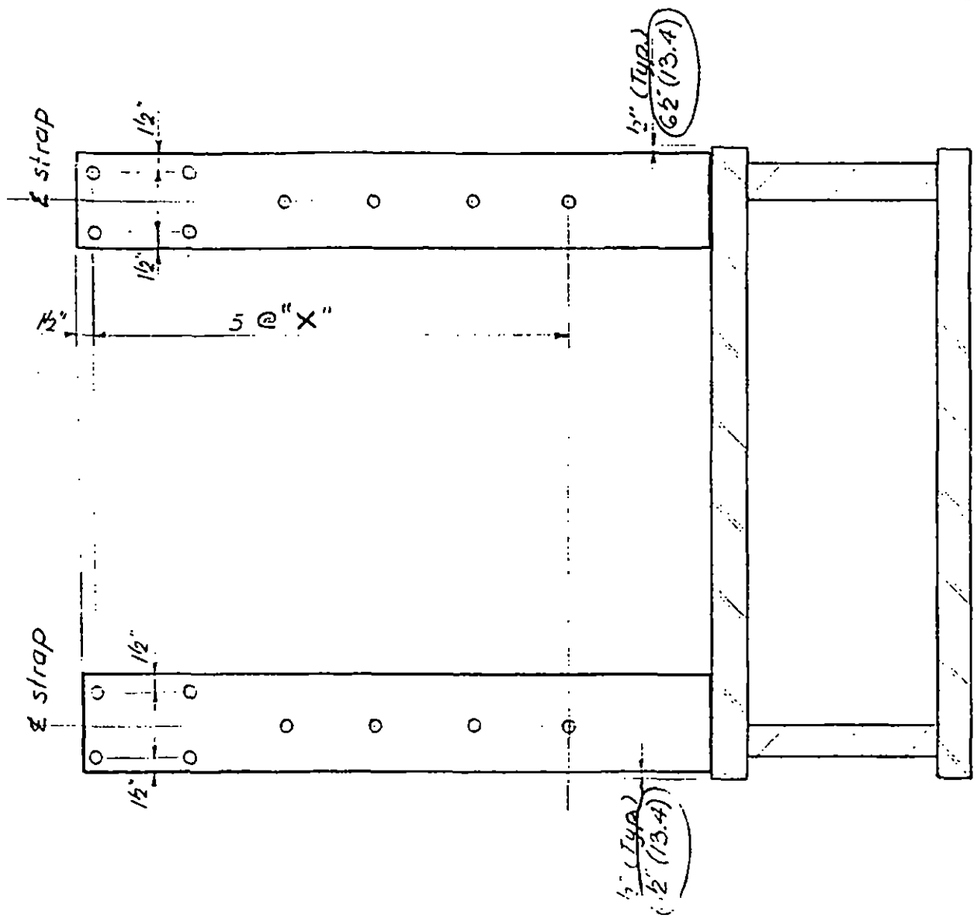

LICENSED PROFESSIONAL ENGINEER
LESLIE E. ROBERTSON
No. 34360
UNIVERSITY OF THE STATE OF NEW YORK

DESIGNED T. O'Neill
DRAWN F. Smith
REVIEWED W. Brewer

18-AB2-13

SKILLING, HELLE, CHRISTIANSEN, ROBERTSON — Structural & Civil Engineers

PROJECT: THE WORLD TRADE CENTER | TITLE: STRAP ANCHOR'S - CORE - DETAIL 14 | DATE: 4/30/69

REVISIONS

5-20-69

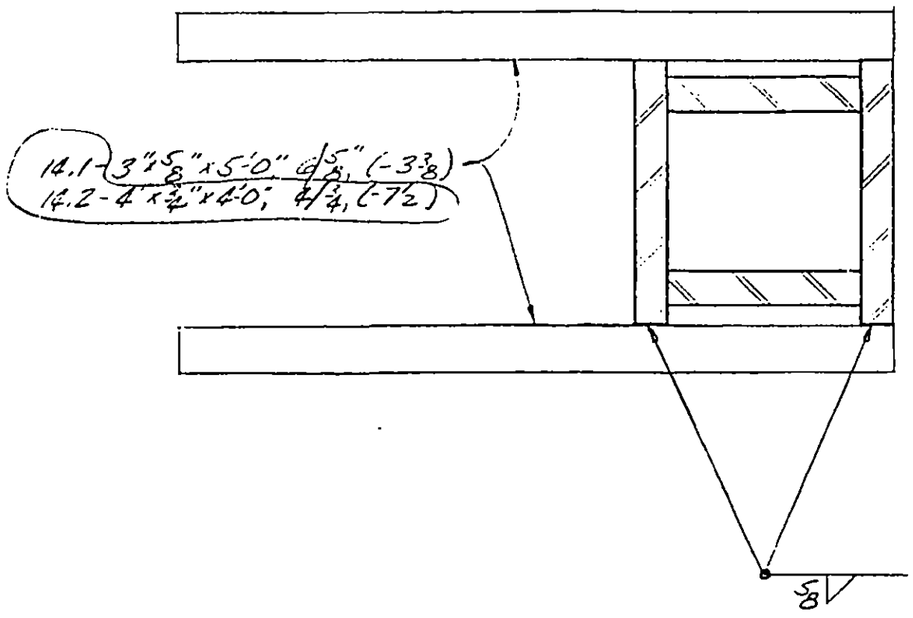

LICENSED PROFESSIONAL ENGINEER
LESLIE E. ROBERTSON
No. 34360
UNIVERSITY OF THE STATE OF NEW YORK

fo

DRAWN J. Adams

REVIEWED W. Brewer

18-A82-14

SKILLING, HELLE, CHRISTIANSEN, ROBERTSON — Structural & Civil Engineers

PROJECT: THE WORLD TRADE CENTER | TITLE: STRAP ANCHORS - CORE - DETAIL 15 | DATE: 4/30/69

REVISIONS

5-28-69

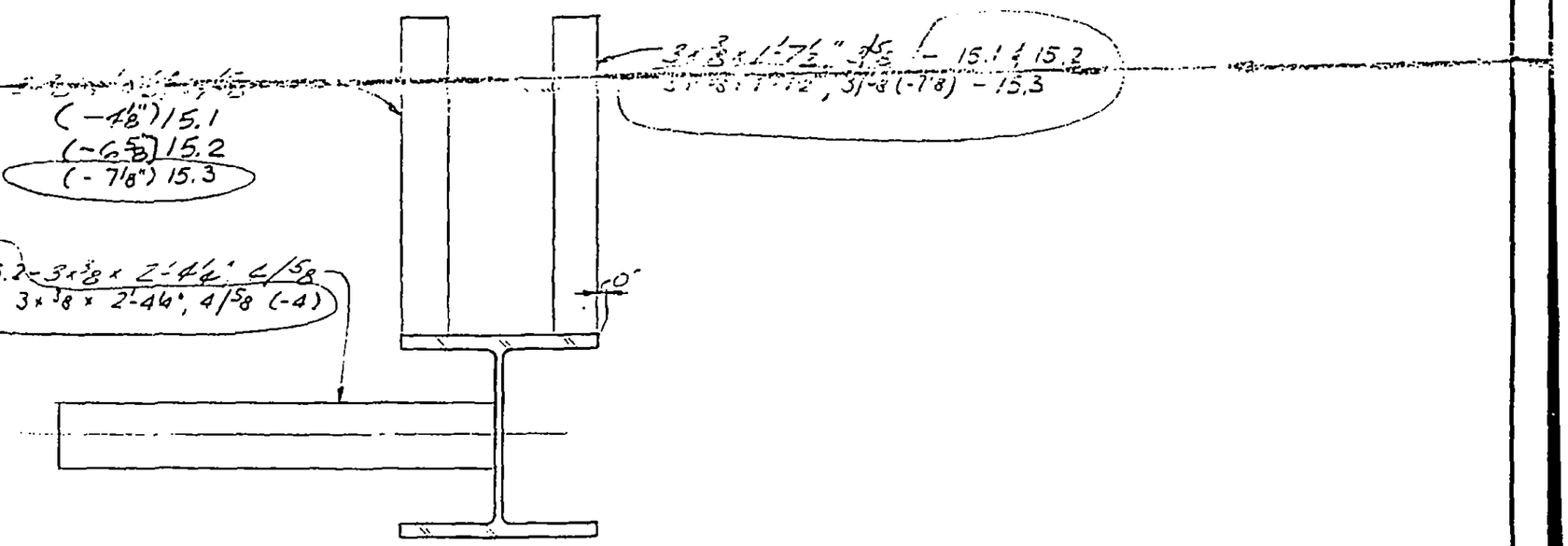

LICENSED PROFESSIONAL ENGINEER — LESLIE E. ROBERTSON — No. 34360 — UNIVERSITY OF THE STATE OF NEW YORK

DESIGNED

DRAWN: J. Adams

REVIEWED: W. Brewer

18-ABZ-15

SKILLING, HELLE, CHRISTIANSEN, ROBERTSON — Structural & Civil Engineers

PROJECT: THE WORLD TRADE CENTER | TITLE: STRAP ANCHOR - CORE - DETAIL 16 | DATE: 4/30/69

REVISIONS

5-28-69

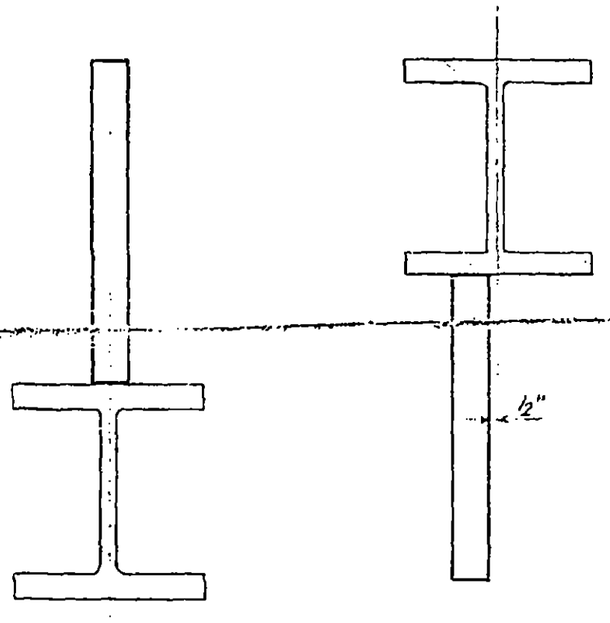

See Note 6 - 18-AB2-2

Detail No	Strap	Studs	Elev.
16.1	3" x ⅜" x 3'-3"	3/⅝	(-3⅝)
16.2	3" x ⅜" x 2'-1½"	4/⅝	(-3⅞)
16.3	3" x ⅜" x 1'-7½"	3/⅝	(-4⅛)
16.4	3" x ⅜" x 2'-1½"	4/⅝	(-3⅝)
16.5	3" x ⅜" x 3'-3"	3/⅝	(-6⅛)
16.6	3" x ⅜" x 1'-7½"	3/⅝	(-7⅝)

Detail 16.1, 16.3, 16.4, 16.5, 16.6

Detail 16.2

LICENSED PROFESSIONAL ENGINEER — LESLIE E. ROBERTSON — No. 34360 — UNIVERSITY OF THE STATE OF NEW YORK

AV
DESIGNED

DRAWN
F. Smith

REVIEWED
W. Brewer

18-AB2-16

SKILLING, HELLE, CHRISTIANSEN, ROBERTSON — Structural & Civil Engineers

PROJECT THE WORLD TRADE CENTER | TITLE STRAP ANCHORS - CORE - DETAIL 17 | DATE 4/30/69

REVISIONS

5-28-69

Detail No	Strap	Studs	Elev.
17.1	4"x½"x4'-6"	⅝"	(-3½)
17.2	4"x½"x4'-6"	⅝"	(-3½)
17.3	4"x½"x3'-9½"	⅝"	(-3½)
17.4	3"x⅜"x1'-6"	2/⅝"	(-7⅝)

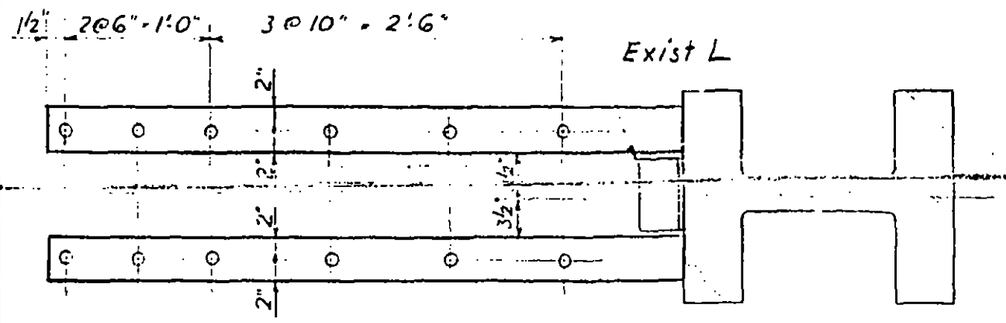

DETAIL 17.1

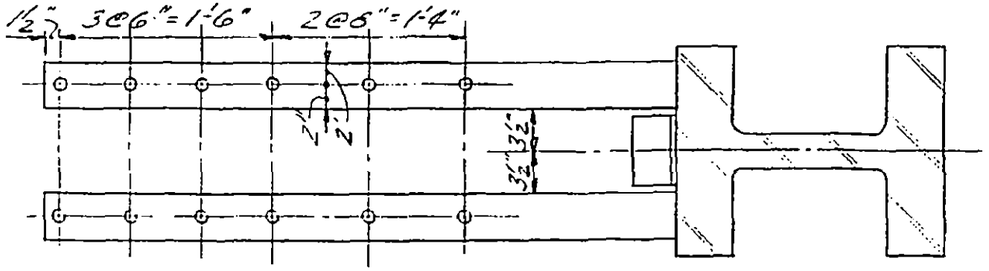

DETAIL 17.3

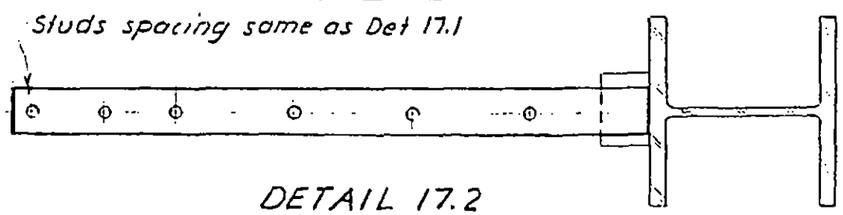

DETAIL 17.2

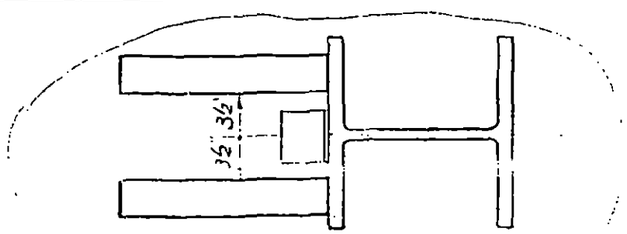

DETAIL 17.4

LICENSED PROFESSIONAL ENGINEER
LESLIE E. ROBERTSON
No. 34360
UNIVERSITY OF THE STATE OF NEW YORK

DESIGNED

DRAWN F. Smith

REVIEWED W. Brewer

18-AB2-17

SKILLING, HELLE, CHRISTIANSEN, ROBERTSON Structural & Civil Engineers

PROJECT THE WORLD TRADE CENTER | TITLE STRAP ANCHOR - CORE - DETAIL 18 | DATE 4/30/69

REVISIONS

5-28-69

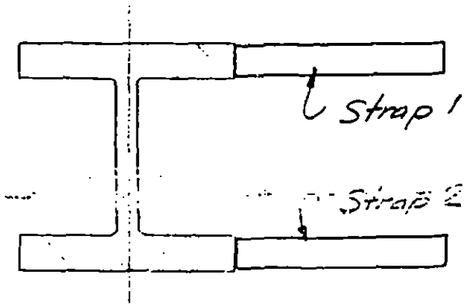

See Note 6 18-AB2-2

Detail No	Strap	Studs	Elev. Strap 1	Elev. Strap 2
18.1	3 x 3/8 x 1'-6"	3/5/8	(-7 5/8)	(-7 5/8)
18.2	3 x 3/8 x 1'-6"	3/5/8	(-7 5/8)	(-6 5/8)
18.3	3 x 3/8 x 1'-6"	2/5/8	(-7 5/8)	(-7 5/8)

LICENSED PROFESSIONAL ENGINEER
LESLIE E. ROBERTSON
No. 34360
UNIVERSITY OF THE STATE OF NEW YORK

DESIGNED

DRAWN F. Smith

REVIEWED W. Brewer

18-AB2-18

SKILLING, HELLE, CHRISTIANSEN, ROBERTSON — Structural & Civil Engineers

PROJECT THE WORLD TRADE CENTER | TITLE STRAP ANCHOR - CORE - DETAIL 19 | DATE 4/30/69

REVISIONS

See Note 6 18-AB2-2			
Detail No	Strap	Studs	Elev
19.1	6 x 1/2 x 2'-6"	2 x 5/8	(-3/8)

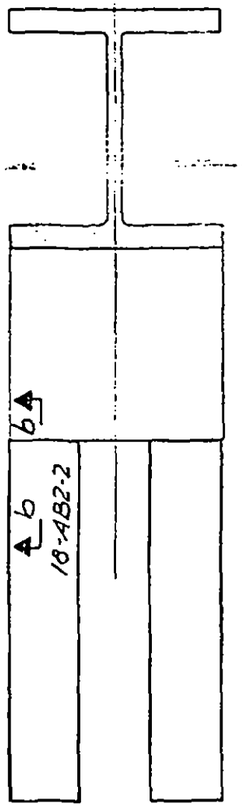

LICENSED PROFESSIONAL ENGINEER
LESLIE E. ROBERTSON
No. 34360
UNIVERSITY OF THE STATE OF NEW YORK

AS
DESIGNED

DRAWN
F. Smith

REVIEWED
W. Brewer

18-AB2-19

SKILLING, HELLE, CHRISTIANSEN, ROBERTSON — Structural & Civil Engineers

PROJECT: THE WORLD TRADE CENTER | TITLE: STRAP ANCHORS - CORE - DETAIL 20 | DATE: 12-13-68

REVISIONS

4/30/69

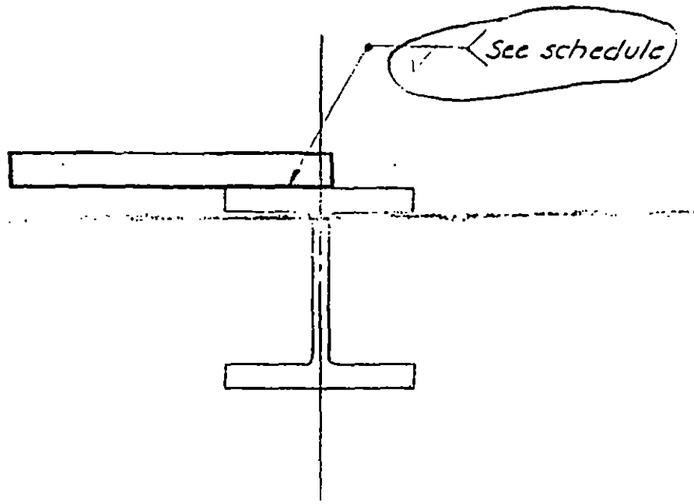

See Note 6 18-AB2-2

Detail No.	Strap	Studs	Alley	Weld
20.1	3"x5/8"x2'-10 1/2"	4/3/4	—	5/8 √9
20.2	3"x3/8"x2'-10"	4/5/8	(-3)	3/8 √8 1/2
20.3	3"x3/8"x2'-3"	3/5/8	(-4 1/8)	5/16 √7 1/2
20.4	4"x1/2"x3'-0"	4/3/4	(-4)	1/2 √10 1/2

LICENSED PROFESSIONAL ENGINEER
LESLIE E. ROBERTSON
No. 34360
UNIVERSITY OF THE STATE OF NEW YORK

46

DESIGNED

DRAWN S Wexler

REVIEWED W. Brewer

18-AB2-20

SKILLING, HELLE, CHRISTIANSEN, ROBERTSON — Structural & Civil Engineers

PROJECT THE WORLD TRADE CENTER | TITLE ANCHOR STRAPS - CORE - DETAIL 21 | DATE 10/30/68

REVISIONS

2-7-69

4-30-69

5-28-69

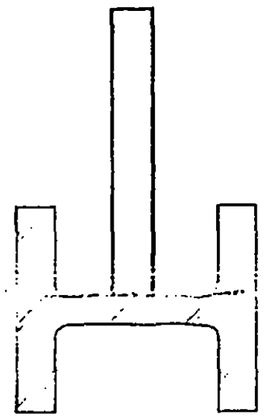

See Note 6 — 18-AB2-2

Detail No	Strap	Studs	Elev
21.1	3"x3/8"x2'-3"	3/5/8	(-4")
21.2	4"x3/4"x3'-9"	6/3/4	(-3 3/4")
21.3	3"x3/8"x2'-3"	3/5/8	(-4 1/8")
21.4	3"x3/8"x2'0"	3/5/8	(-4 3/8")
21.5	3"x3/8"x2'3"	3/5/8	(-6 5/8")
21.6	3"x1/2"x2'-3"	3/3/4	(-7 1/2")
21.7	3"x1/2"x2'-9"	3/3/4	(-7 1/2")

LICENSED PROFESSIONAL ENGINEER — LESLIE E. ROBERTSON — No. 34360 — UNIVERSITY OF THE STATE OF NEW YORK

47

DESIGNED L. Olsen

DRAWN S Wexler

REVIEWED W. Brewer

18-AB2-21

SKILLING, HELLE, CHRISTIANSEN, ROBERTSON — Structural & Civil Engineers

PROJECT THE WORLD TRADE CENTER | TITLE STRAP ANCHORS - CORE - DETAIL 22 | DATE 10/30/68

REVISIONS

4-30-69
5-20-69

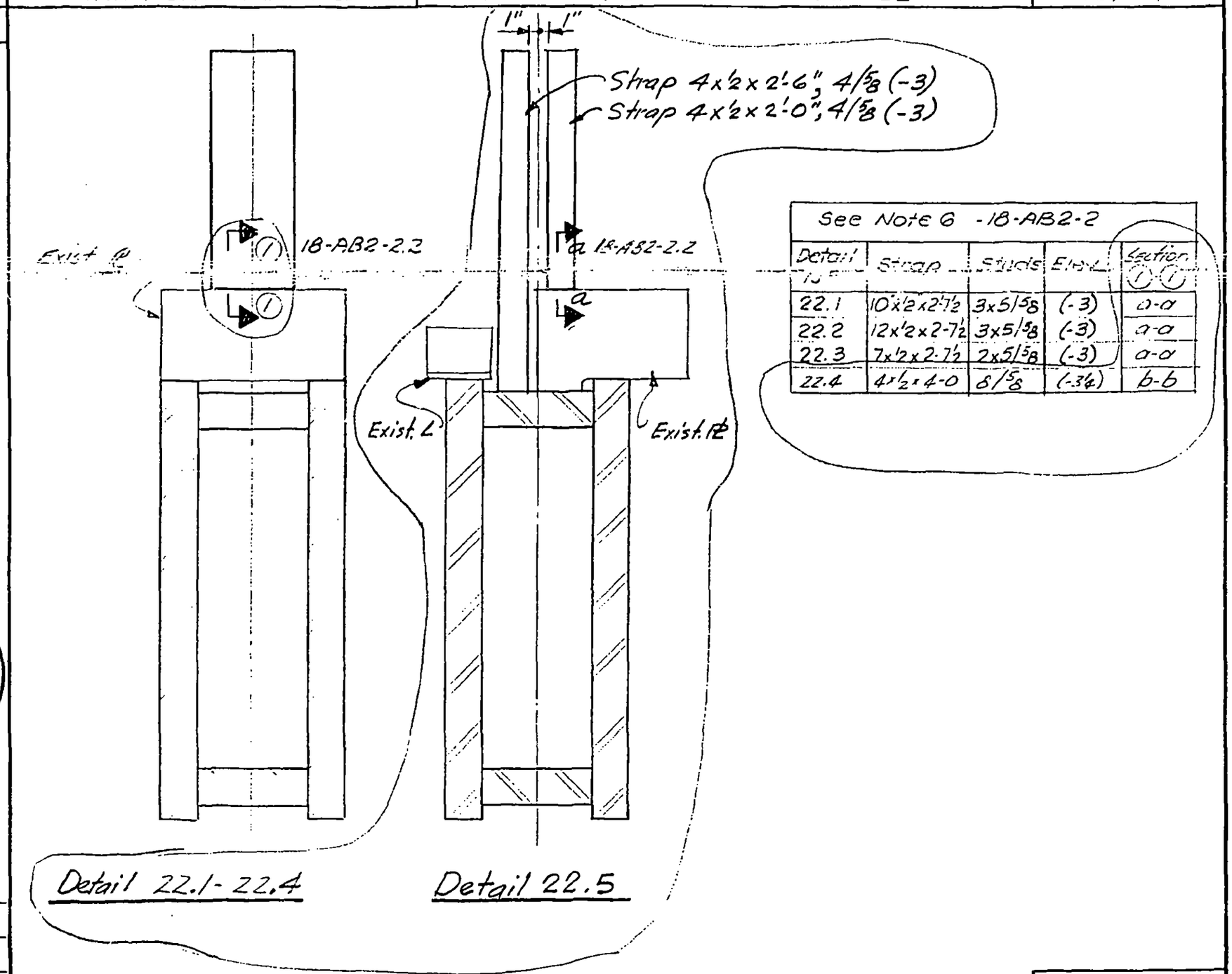

See Note 6 - 18-AB2-2

Detail No.	Strap	Studs	End L	Section 1 1
22.1	10x½x2'-7½	3x5/⅝	(-3)	a-a
22.2	12x½x2-7½	3x5/⅝	(-3)	a-a
22.3	7x½x2-7½	2x5/⅝	(-3)	a-a
22.4	4x½x4-0	6/⅝	(-3¼)	b-b

LICENSED PROFESSIONAL ENGINEER
LESLIE E. ROBERTSON
No. 34960
REGISTERED OF THE STATE OF NEW YORK

48

DESIGNED L. O'Neil

DRAWN S. Wexler

REVIEWED W. Brewer

18-AB2-22

SKILLING, HELLE, CHRISTIANSEN, ROBERTSON — Structural & Civil Engineers

PROJECT THE WORLD TRADE CENTER | TITLE STRAP ANCHORS - CORE - DETAIL 23 | DATE 12-13-68

REVISIONS

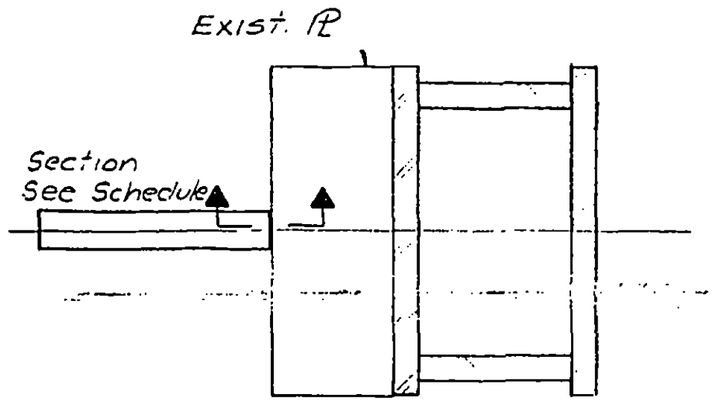

TYPE A

See Note 6 · 18-AB2-2						
Detail Nº	Strap	Studs	Elev	Type	Dimen. "A"	Section 18-AB2-2
23.1	4"x½"x2'-7½"	5/¾	(-5¾)	B	9½"	b-b
23.2	4x½x3-1½	6/⅝	(-3¼)	B	9½	b-b

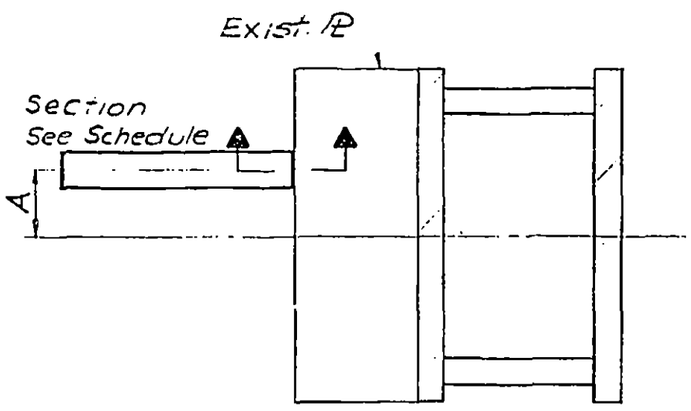

TYPE B

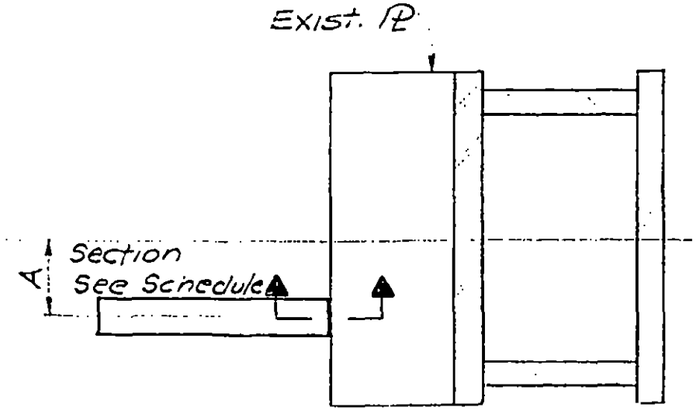

TYPE C

DESIGNED [signature]

DRAWN S. Wexler

REVIEWED

18-AB2-23

SKILLING, HELLE, CHRISTIANSEN, ROBERTSON — Structural & Civil Engineers

PROJECT THE WORLD TRADE CENTER | TITLE STRAP ANCHORS - CORE - DETAIL 24 | DATE 10/30/68

REVISIONS

12-13-68
2-7-69
4-30-69
5-20-69
5-28-69
10-1-69

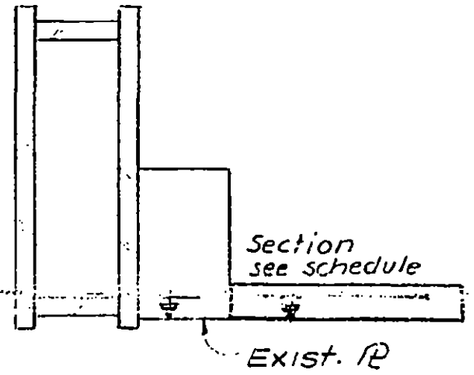

24.1 - 24.11, 24.13, 24.14

24.16, 24.17

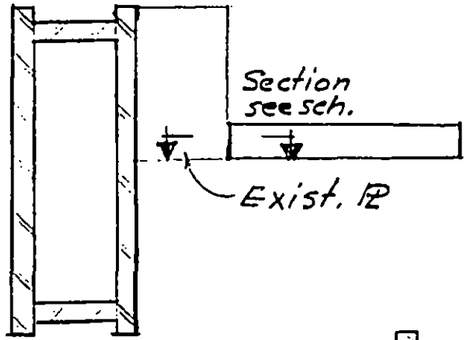

24.12

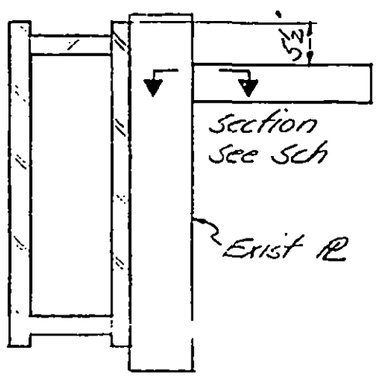

24.15

See Note 6 - 18-AB2-2

Detail Nº	Strap	Studs	Elev	Section (18-AB2-2)
24.1	4"x3/8"x2'-1 1/2"	4/5/8	(-3 1/8)	a-a
24.2	3"x3/8"x1'-7 1/2"	3/3/4	(-5 7/8)	b-b
24.3	4"x1/2"x2'-11"	6/5/8	(-5 3/4)	b-b
24.4	4"x1/2"x2'-11"	6/5/8	(-5 1/2)	a-a
24.5	5"x3/8"x2'-1 1/2"	4/5/8	(-3 3/8)	a-a
24.6	5"x3/8"x1'-6"	3/3/4	(-6 5/8)	a-a
24.7	3"x3/8"x1'-6"	3/5/8	(-6 5/8)	a-a
24.8	3"x3/8"x1'-6"	3/5/8	(-3 3/8)	b-b
24.9	3"x3/8"x1'-6"	3/5/8	(-3 1/8)	a-a
24.10	3"x3/8"x2'0"	4/5/8	(-3 1/8)	b-b
24.11	3"x3/8"x2'0"	4/5/8	(-5 7/8)	b-b
24.12	10"x5/8"x5'6"	2x10 5/8	(-3 1/2)	b-b
24.13	5"x3/4"x5'-1 1/2"	10/5/8	(-3)	6-6
24.14	5"x3/4"x5'-1 1/2"	10/5/8	(-9 1/2)	6-6
24.15	4"x1/2"x2'-11"	7/5/8 *	(-5 3/4)	6-6
24.16	3"x3/8"x1'-6"	3/5/8	(-6 3/4)	a-a
24.17	3"x3/8"x1'-6"	3/5/8	(-5 5/8)	a-a

*@5" c.c.

LICENSED PROFESSIONAL ENGINEER — LESLIE E. ROBERTSON — No. 34360 — UNIVERSITY OF THE STATE OF NEW YORK

49

DESIGNED T. O'Neil
DRAWN S. Wexler
REVIEWED W. Brenner

18-AB2-24

SKILLING, HELLE, CHRISTIANSEN, ROBERTSON — Structural & Civil Engineers

PROJECT THE WORLD TRADE CENTER | TITLE STRAP ANCHORS - CORE · DETAIL 25 | DATE 10/30/68

REVISIONS

2-7-69

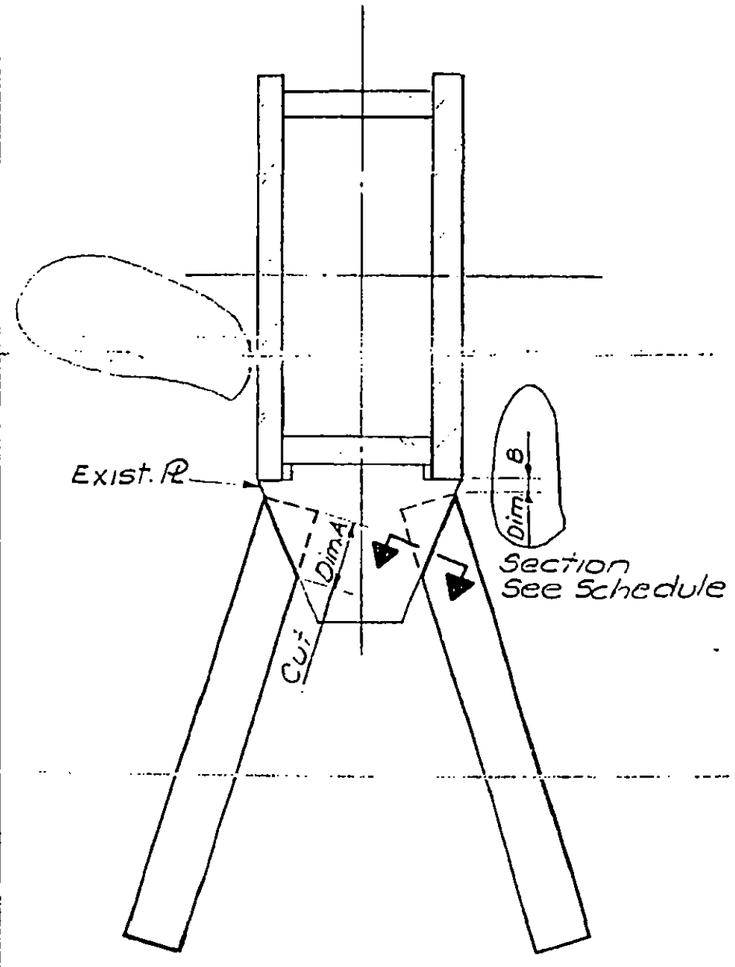

See Note 6 18-AB2-2

Detail Nº	Strap	Studs	Elev	Dim A	Section (18-AB2-2)	Dim. B
25.1	5"x½"x3'-7½"	7/5B	(-3¼)	6"	b-b	1"
25.2	5"x½"x3'-7½"	7/5B	(-3)	6"	a-a	1"
25.3	4"x¼"x4'-1½"	7/5B	(-3)	5½"	b-b	1"
25.4	4"x½"x3'-1½"	6/5B	(-3)	2"	a-a	1"
25.5	5½"x⅝"x3'-3"	2x6/5B	(-3⅛)	6⅜"	b-b	¾"

LICENSED PROFESSIONAL ENGINEER — LESLIE E. ROBERTSON — No. 24300 — UNIVERSITY OF THE STATE OF NEW YORK

DESIGNED L. O'Neill

DRAWN S. Wexler

REVIEWED W. Brewer

18-AB2-25

SKILLING, HELLE, CHRISTIANSEN, ROBERTSON — Structural & Civil Engineers

PROJECT TI-IE WORLD TRADE CENTER | TITLE STRAP ANCHORS -CORE - DETAIL 26 | DATE 12-13-68

REVISIONS
4-30-69
5-20-69
5-28-69

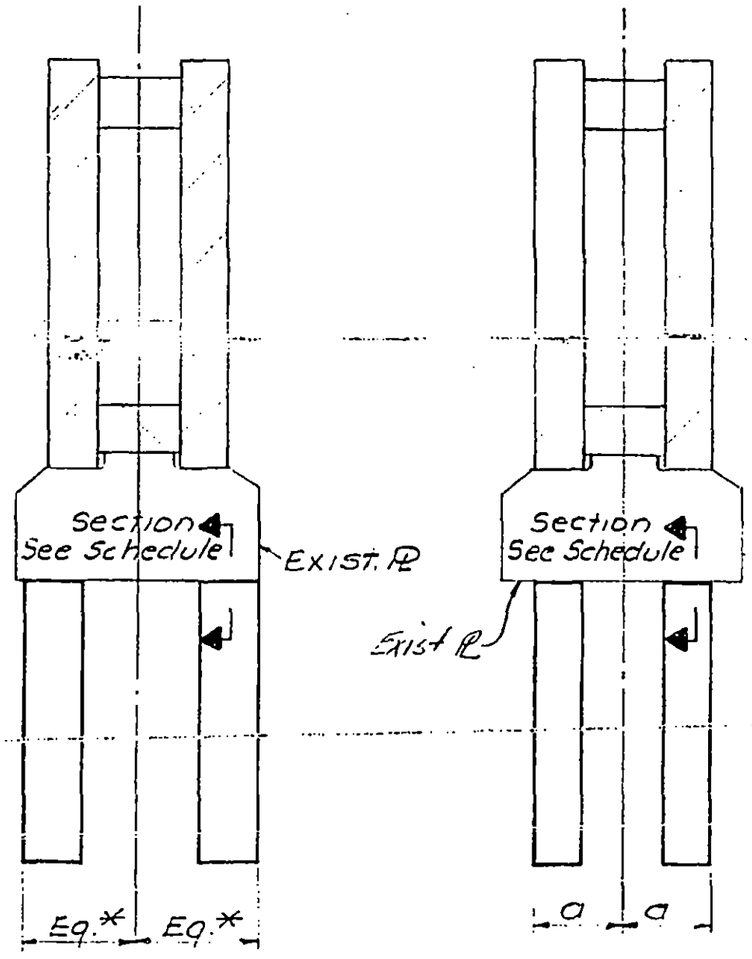

TYPE A TYPE B

* Dimension to be maximum possible consistent with symmetry about column ℄.

See note 6 18-AB2-2

Detail No	Strap	Studs	Elev	Type	Dimen. "a"	Sect 18-AB2-2
26.1	6"x½"x2'-7½"	5/7/8	(-5½)	A	—	a-a
26.2	6x½x2'-½	4/7/8	(-5½)	A	—	a-a
26.3	6x½x2-1½	2x4/5/8	(-3)	A	—	a-a
26.4	5x½x3-0	6/5/8	(-5)	B	12"	a-a
26.5	5x½x3-0	6/5/8	(-5)	B	10"	a-a
26.6	6x⅝x2-0	2x4/3/4	(-6⅝)	B	9"	b-b
26.7	6"x½"x2'-6"	2x5/5/8	(-3)	B	8½"	a-a
26.8	6"x½"x2'-6"	2x5/5/8	(-3⅜)	B	8½"	a-a
26.9	6"x½"x2'-6"	2x5/5/8	(-5½)	B	8½"	a-a
26.10	5"x½"x3'-7½"	7/5/8	(-3¼)	A	—	b-b
26.11	6"x¾"x3'-0"	2x6/5/8	(-3)	A	—	b-b
26.12	4"x½"x2'-0"	4/5/8	(-3¼)	B	8½"	b-b
26.13	6"x⅝"x1'-10½"	2x4/1/4	(-6⅞)	A	—	b-b
26.14	8"x½"x2'-0	2x4/3/4	(-7)	A	—	b-b
26.15	6"x½"x1'-10½	2x3/3/4	(-7)	A	—	b-b
26.16	6"x½"x1'-10½	2x3/1/4	(-6¾)	B	10"	b-b

LICENSED PROFESSIONAL ENGINEER — LESLIE E. ROBERTSON — No. 34360 — UNIVERSITY OF THE STATE OF NEW YORK

DESIGNED L. E. Robertson
DRAWN S. Wexler
REVIEWED W. Brewer

18-AB-2-26

SKILLING, HELLE, CHRISTIANSEN, ROBERTSON — Structural & Civil Engineers

PROJECT THE WORLD TRADE CENTER | TITLE ANCHOR STRAPS - CORE - DETAIL 27 | DATE 12-13-68

REVISIONS

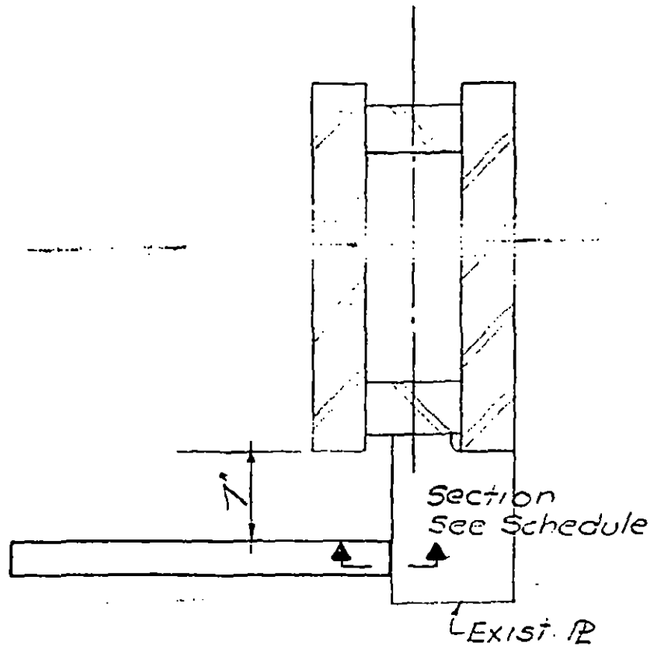

See Note 6 18-AB2-2				
Detail No	Strap	Studs	Elev.	Section (18-AB2-2)
27.1	3"x1/2"x2'-1 1/2"	4 3/4	(-5'2)	a-a
27.2	3"x1/2"x2'-3 1/2"	5 5/8	(-5)	c-c
27.3	3"x3/4"x2'-2	4 3/4	(-6'2)	b-b

LICENSED PROFESSIONAL ENGINEER
LESLIE E. ROBERTSON
No. 34360
UNIVERSITY OF THE STATE OF NEW YORK

DESIGNED

DRAWN
S. Wexler

REVIEWED

18-AB2-27

SKILLING, HELLE, CHRISTIANSEN, ROBERTSON — Structural & Civil Engineers

PROJECT: THE WORLD TRADE CENTER | TITLE: STRAP ANCHORS - CORE - DETAIL 56 | DATE: 12-13-68

REVISIONS

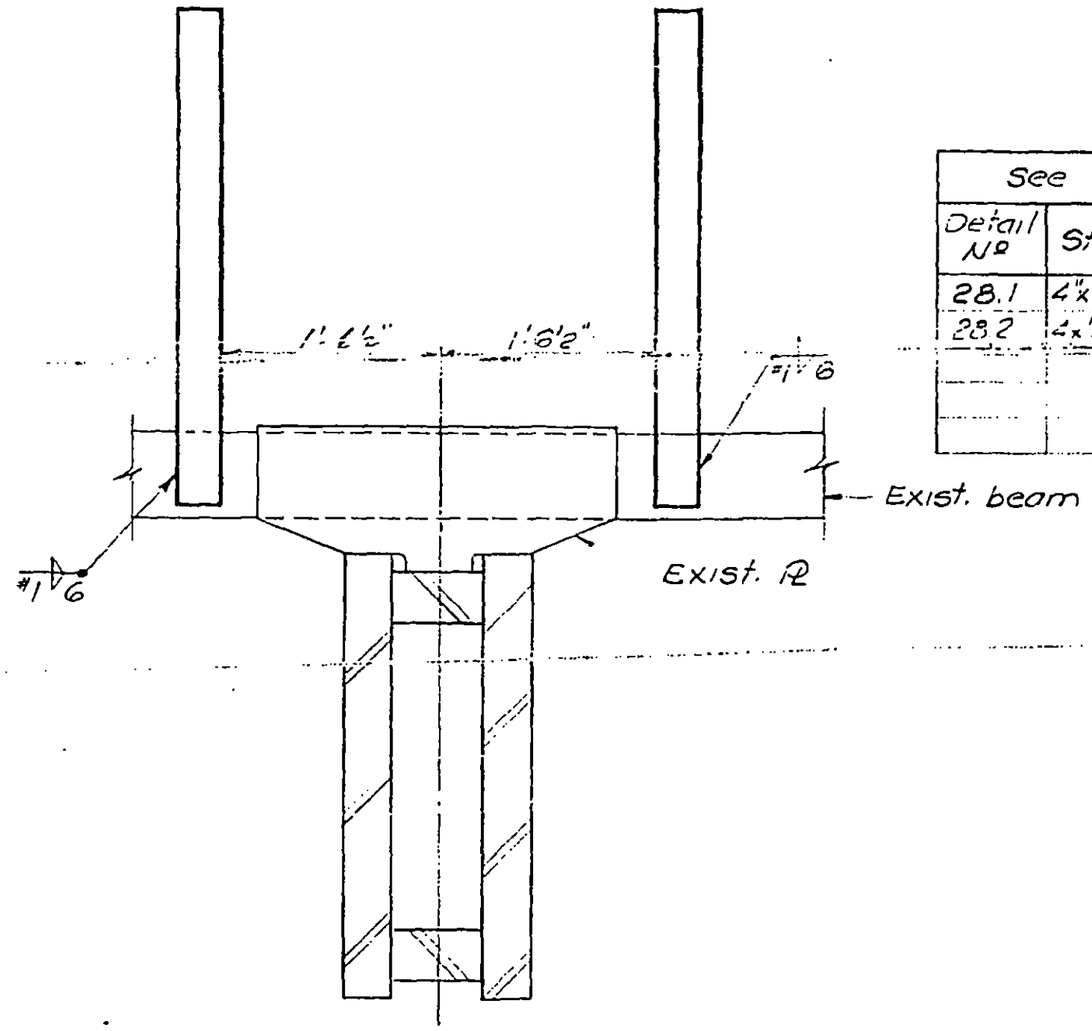

See note 6			18-AB2-2	
Detail Nº	Strap	Studs	Elev	Weld #1
28.1	4"x½x2'-7½	4 1/8	—	1/4
28.2	4x½x2-6	4 1/4	—	5/16

LICENSED PROFESSIONAL ENGINEER
LESLIE E. ROBERTSON
No. 34360
UNIVERSITY OF THE STATE OF NEW YORK

DESIGNED

DRAWN S. Wexler

REVIEWED

18-AB2-28

SKILLING, HELLE, CHRISTIANSEN, ROBERTSON — Structural & Civil Engineers

PROJECT THE WORLD TRADE CENTER | TITLE ANCHOR STRAPS - CORE - DETAIL 29 | DATE 12-13-68

REVISIONS

4-30-69
7-14-69

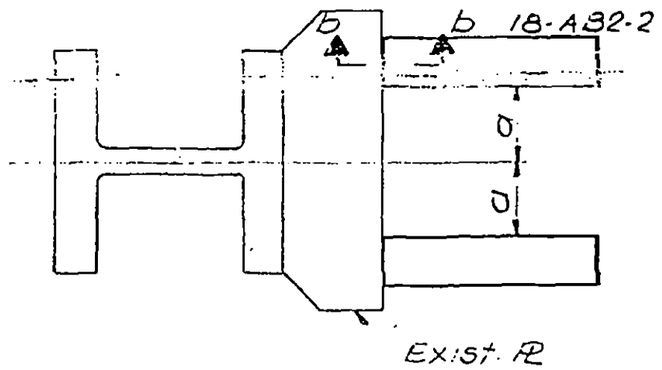

See Note 6	18-AB2-2			
Detail No	Strap	Studs	Elev	Dimen a
29.1	4x5/8x1-6	3/5/8	(-6 7/8)	5"
29.2	3x5/16x1'-6"	3/5/8	(-6 15/16)	5"
29.3	6x1/2x2'-0"	4/7/8	(-6 3/4)	4 1/2"
29.4	6"x1/2"x2'-6"	2x5/5/8	(-3 1/4)	7"
29.5	6"x1/2"x2'-6"	2x5/5/8	(-3 1/4)	3 1/2"
29.6	6"x1/2"x2'-0"	2x4/5/8	(-3 1/4)	5"
29.7	6"x1/2"x2'-0"	2x4/5/8	(-3)	5"
29.8	3"x3/8"x1'-6"	3/5/8	(-3 3/8)	2"
29.9	6"x1/2"x2'-6"	2x5/5/8	(-3 1/4)	6"
29.10	6"x1/2"x2'-6"	2x5/5/8	(-3 1/4)	3"
29.11	6"x1/2"x2'-6"	2x5/5/8	(-5 3/4)	3"

LICENSED PROFESSIONAL ENGINEER
LESLIE E. ROBERTSON
No 34360
UNIVERSITY OF THE STATE OF NEW YORK

51

DESIGNED
[illegible]

DRAWN
S. Wexler

REVIEWED
W. Brewer

18-AB2-29

SKILLING, HELLE, CHRISTIANSEN, ROBERTSON — Structural & Civil Engineers

PROJECT THE WORLD TRADE CENTER | TITLE ANCHOR STRAPS - CORE - DETAIL 30 | DATE 12-13-68

REVISIONS

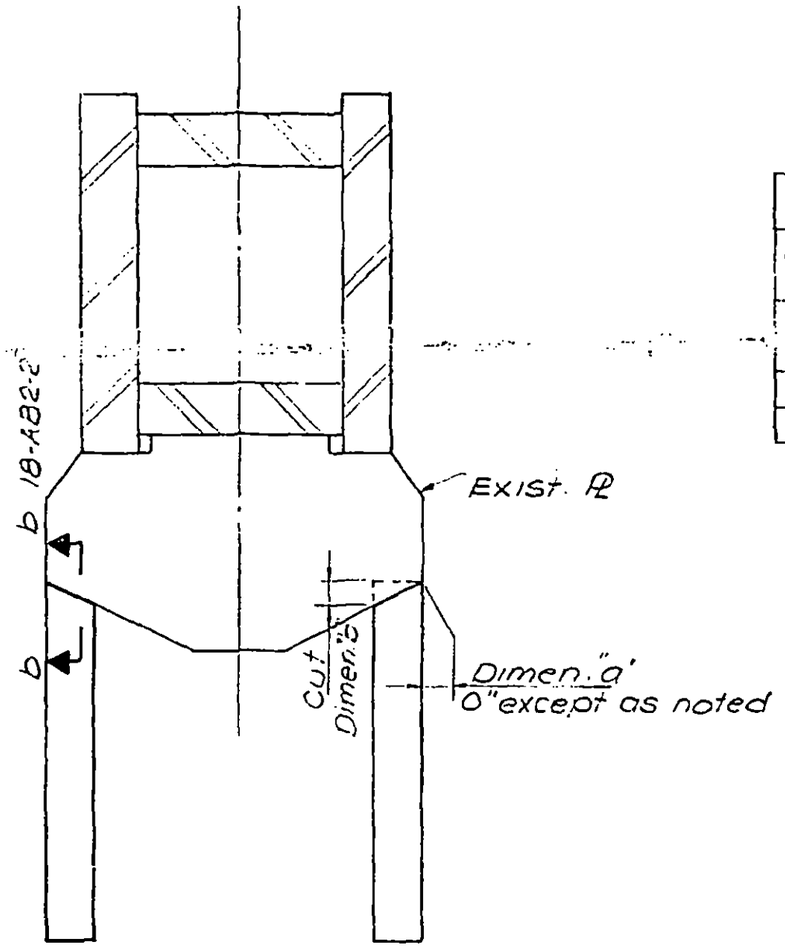

See Note 6		18-AB2-2			
Detail Nº	Strap	Studs	Elev	Dimen "c"	Dimen "b"
30.1	4"x3/4"x2'6"	5 3/4	(-6'2)	-	2"
30.2	6"x3/4"x2'0"	2x4 1/4	(-6'2)	5'2"	4 5/8"

LICENSED PROFESSIONAL ENGINEER LESLIE E. ROBERTSON UNIVERSITY OF THE STATE OF N.Y. No. 34360

DESIGNED
DRAWN S. Wexler
REVIEWED

18-AB2-30

SKILLING, HELLE, CHRISTIANSEN, ROBERTSON — Structural & Civil Engineers

PROJECT THE WORLD TRADE CENTER | TITLE STRAP ANCHORS - CORE - DETAIL 51 | DATE 10/30/68

REVISIONS

2-7-69

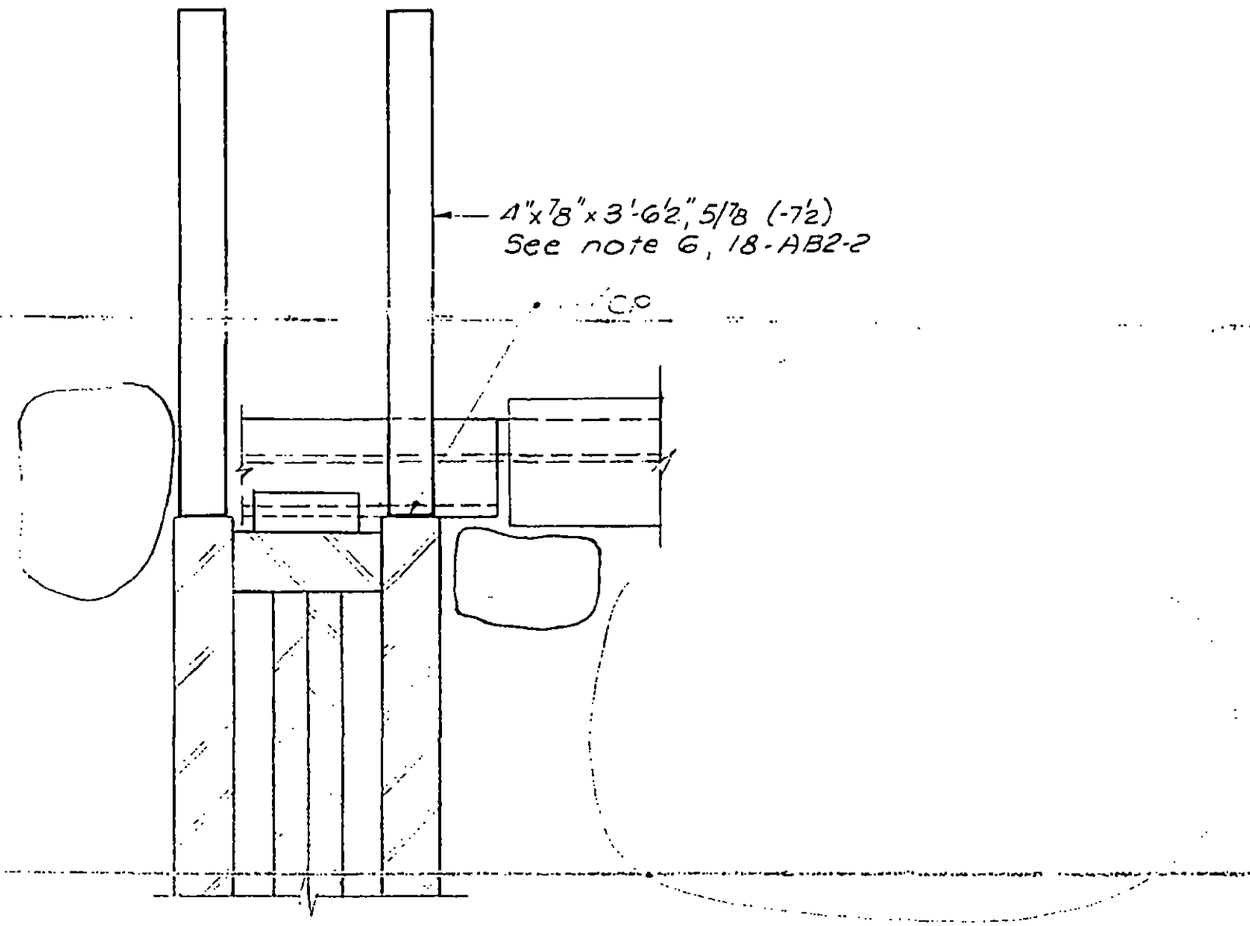

DETAIL 51A

LICENSED PROFESSIONAL ENGINEER
LESLIE E. ROBERTSON
No. 34360
UNIVERSITY OF THE STATE OF NEW YORK

DESIGNED L. O'Neill

DRAWN S. Wexler

REVIEWED W. Brewer

18-AB2-51.1

SKILLING, HELLE, CHRISTIANSEN, ROBERTSON — Structural & Civil Engineers

PROJECT THE WORLD TRADE CENTER | TITLE STRAP ANCHORS - CORE - DETAIL 51 | DATE 10/30/68

REVISIONS

2-7-69

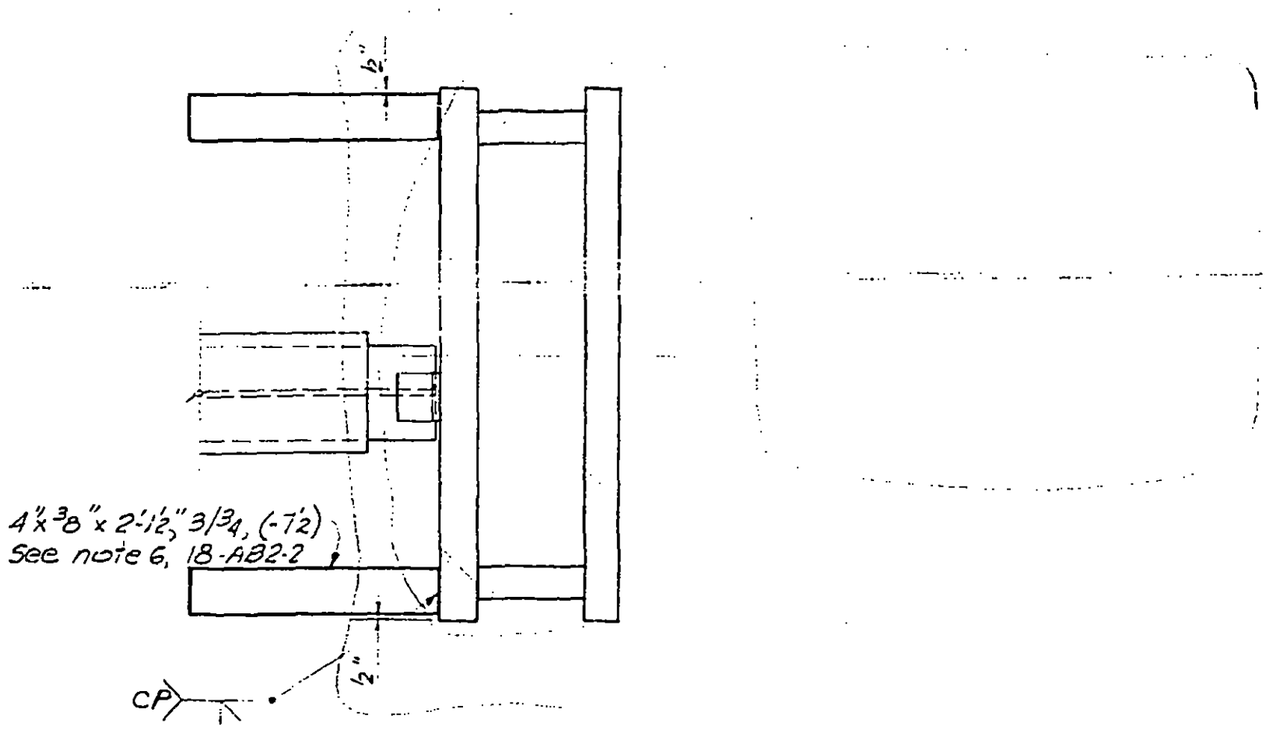

DETAIL 51 B

DESIGNED W. Conlon

DRAWN S. Wexler

REVIEWED W. Viewer

18-AB2-51.2

SKILLING, HELLE, CHRISTIANSEN, ROBERTSON — Structural & Civil Engineers

PROJECT THE WORLD TRADE CENTER | TITLE ANCHOR STRAPS - CORE - DETAIL 52 | DATE 10/30/68

REVISIONS

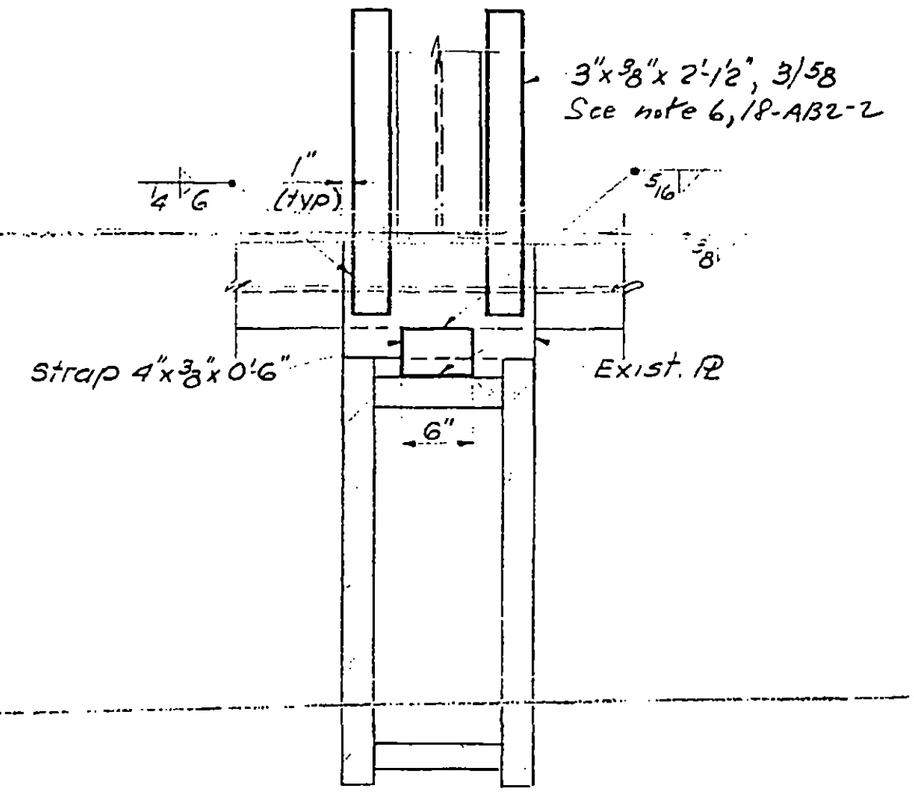

LICENSED PROFESSIONAL ENGINEER
LESLIE E. ROBERTSON
No. 34360
UNIVERSITY OF THE STATE OF NEW YORK

DESIGNED L. O'Neill
DRAWN S. Wexler
REVIEWED

18-AB2-52

SKILLING, HELLE, CHRISTIANSEN, ROBERTSON — Structural & Civil Engineers

PROJECT THE WORLD TRADE CENTER | TITLE STRAP ANCHOR - CORE - DETAIL 53 | DATE 10/30/68

REVISIONS

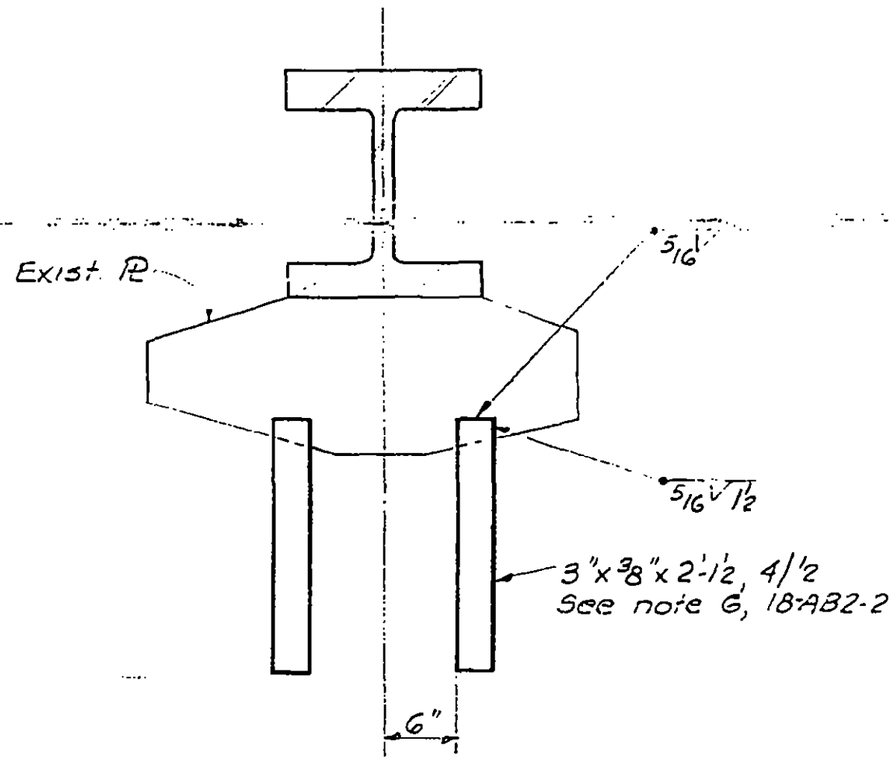

LICENSED PROFESSIONAL ENGINEER
LESLIE E. ROBERTSON
No. 34360
UNIVERSITY OF THE STATE OF NEW YORK

DESIGNED J. O'Neil
DRAWN S Wexler
REVIEWED

18-AB2-53

SKILLING, HELLE, CHRISTIANSEN, ROBERTSON — Structural & Civil Engineers

PROJECT THE WORLD TRADE CENTER | TITLE STRAP ANCHORS - CORE - DETAIL 31 | DATE 12-13-68

REVISIONS

5-28-69

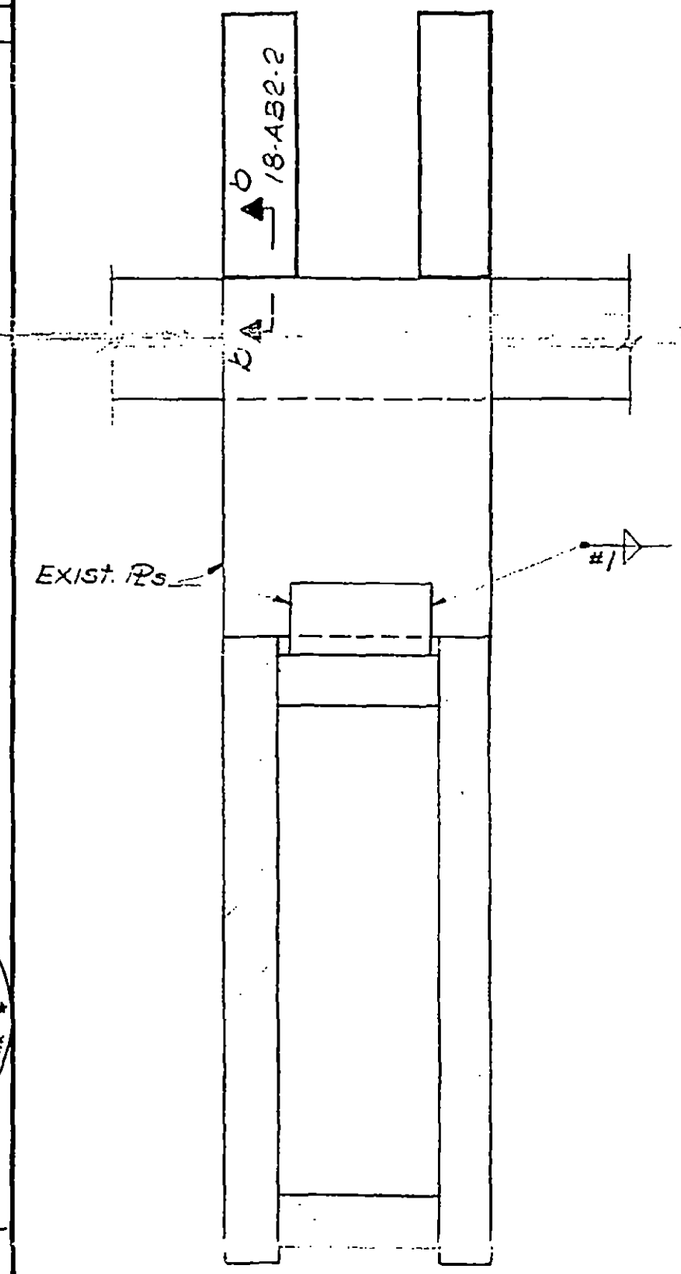

See Note G — 18-AB2-2

Detail No.	Strap	Stiffener	Stiffener	Weld #1
31.1	6"x5/8"x1'-10½"	2x4/3/4	(-6 7/8)	5/8
31.2	8"x1½x2'-0"	2x4/3/4	(-7)	1/2
31.3	3"x3/8"x1'-6½"	3/5/8	(-6 7/8)	-

LICENSED PROFESSIONAL ENGINEER — LESLIE E. ROBERTSON — No. 34360 — UNIVERSITY OF THE STATE OF NEW YORK

DESIGNED L. E. Robertson

DRAWN S. Wexler

REVIEWED

18-AB2-31

SKILLING, HELLE, CHRISTIANSEN, ROBERTSON — Structural & Civil Engineers

PROJECT THE WORLD TRADE CENTER | TITLE ANCHOR STRAPS - CORE - DETAIL 32 | DATE 12-13-68

REVISIONS
4-30-69
5-28-69

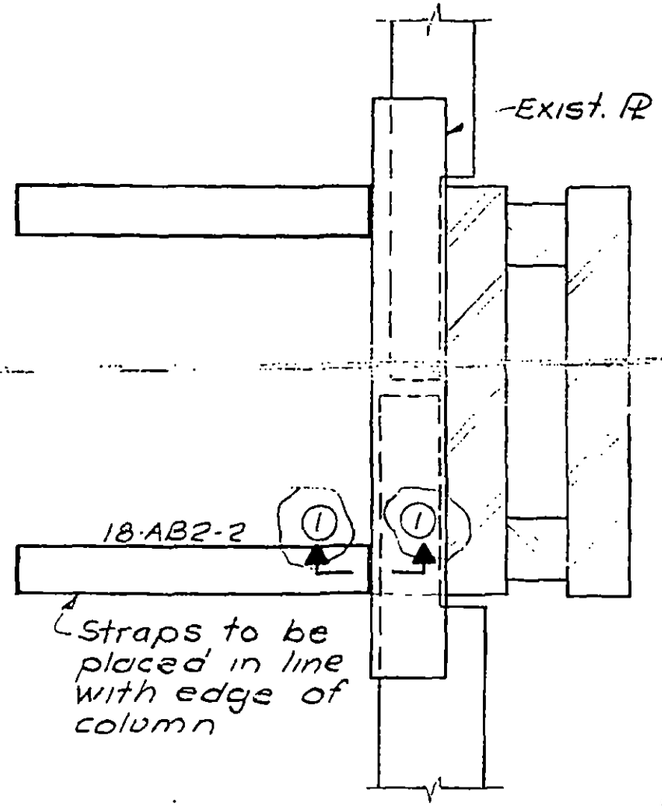

32.1, 32.2, 32.3, 32.9, 32.13-32.19

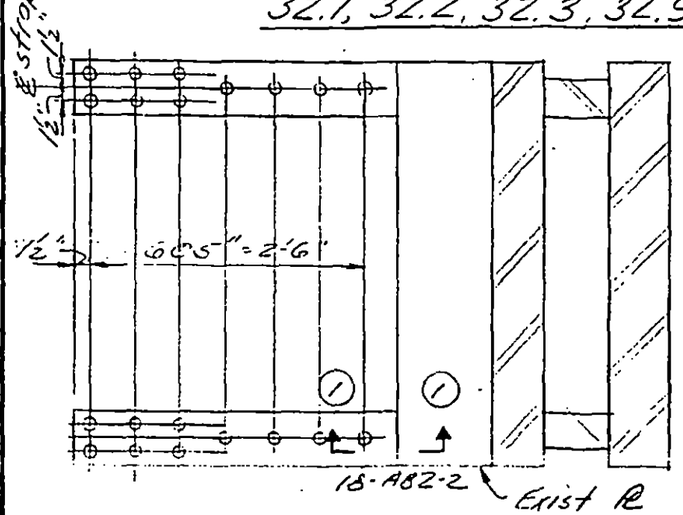

32.4, 32.10, 32.11

See Note 6, 18-AB2-2					
Detail No	Strap	Studs	Elev	Section 1 1	Cut A
32.1	4 x 1/2 x 2'-6"	5/5/8	(-5)	a-a	—
32.2	5 x 3/4 x 2'-6"	5/7/8	(-6 1/2)	a-a	—
32.3	6 x 1/2 x 4'-6"	9/5/8	(-5 3/8)	b-b	—
32.4	6 x 3/8 x 3'-0"	10/5/8 *	(-3)	b-b	—
32.5	4 x 1/2 x 3'-0"	5/5/8	(-5 3/4)	b-b	7/8
32.6	4 x 1/2 x 3'-0"	5/3/8	(-5 3/4)	b-b	7/8
32.7	6 x 3/8 x 4'-6"	9/5/8	(-3)	b-b	—
32.8	4 x 1/2 x 3'-6"	7/5/8	(-3 1/4)	c-c	1 3/8
32.9	10 x 3/8 x 4'-6"	8/3/4	(-5 7/8)	b-b	—
32.10	8 x 1/2 x 3'-0"	10/5/8 *	(-3 1/4)	b-b	—
32.11	8 x 1/2 x 3'-0"	10/5/8 *	(-4 3/4)	b-b	—
32.12	4 x 1/2 x 3'-6"	6/5/8	(-3 1/4)	b-b	3/4
32.13	6 x 1/2 x 2'-6"	2 x 4/5/8	(-5 1/4)	b-b	—
32.14	4 x 1/2 x 3'-6"	6/5/8	(-5 1/4)	b-b	—
32.15	6 x 1/2 x 2'-6"	4/7/8	(-6 3/4)	a-a	—
32.16	4 x 1/2 x 2'-6"	4/3/4	(-6 7/8)	a-a	—
32.17	4 x 1/2 x 2'-6"	4/3/4	(-6 3/4)	a-a	—
32.18	3 x 1/2 x 2'-6"	3/3/4	(-7)	a-a	—
32.19	3 x 3/8 x 2'-6"	3/5/8	(-6 7/8)	a-a	—

* See Plan for spacing.

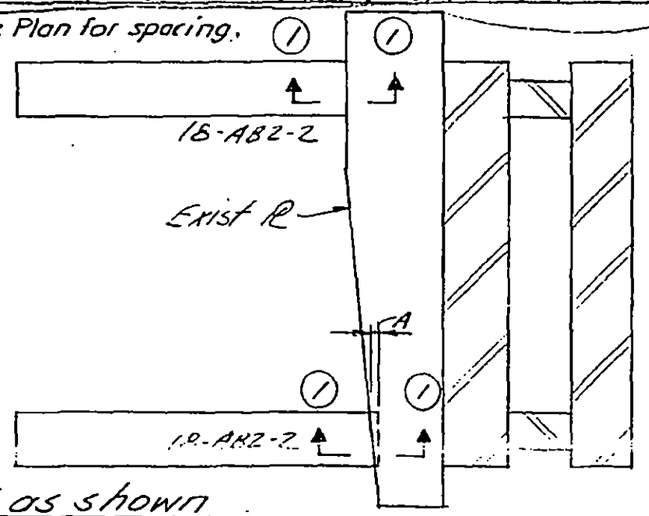

32.5 as shown
32.6, 32.7 & 32.12 opp hand

LICENSED PROFESSIONAL ENGINEER — LESLIE E. ROBERTSON — No. 34360 — UNIVERSITY OF THE STATE OF NEW YORK

SV
DESIGNED J. O'Kiely
DRAWN S. Wexler
REVIEWED W. Brewer

18-AB2-32

SKILLING, HELLE, CHRISTIANSEN, ROBERTSON — Structural & Civil Engineers

PROJECT: THE WORLD TRADE CENTER | TITLE: STRAP ANCHORS - CORE - DETAIL 33 | DATE: 12-13-68

REVISIONS
2-7-69
4-30-69
5-28-69

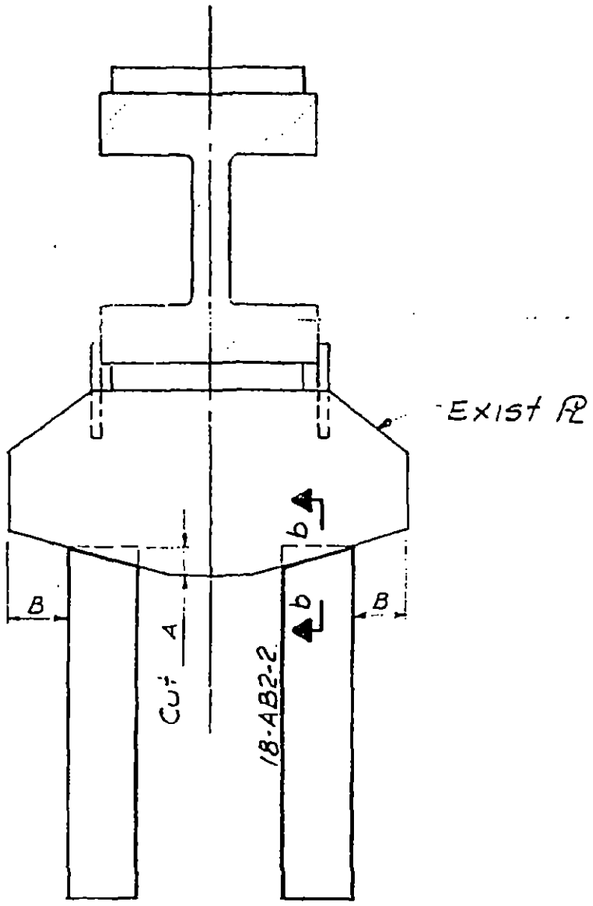

See Note 6 — 18-AB2-2

Detail No.	Strap	Studs	Elev.	Dim. A	Dim B
33.1	6"x 1/2" x 2'-6"	5/7/8	(-6 3/4)	1 3/8"	4 1/2"
33.2	3"x 3/8" x 1'-6"	3/5/8	(-3 3/8)	1/2"	4"
33.3	6"x 1/2" x 2'-0"	2x 4/3/8	(-3/4)	1/2"	6"
33.4	6"x 1/2" x 2'-6"	2x 5/5/8	(-3/4)	1/2"	4 1/2"
33.5	3"x 3/8" x 1'-6"	3/5/8	(-3 3/8)	1/2"	5"
33.6	3"x 3/8" x 1'-6"	3/5/8	(-6 7/8)	1/2"	4"

LICENSED PROFESSIONAL ENGINEER — LESLIE E. ROBERTSON — No. 34360 — UNIVERSITY OF THE STATE OF NEW YORK

DESIGNED: L. E. Robertson
DRAWN: S. Wexler
REVIEWED: W. Brewer

18-AB2-33

SKILLING, HELLE, CHRISTIANSEN, ROBERTSON — Structural & Civil Engineers

PROJECT: THE WORLD TRADE CENTER | TITLE: STRAP ANCHORS - CORE - DETAIL 34 | DATE: 2-7-69

REVISIONS

4-30-69

See Note 6 18-AB2-2

Detail NO.	Strap	Studs	Elev.	Dim. A
34.1	6 x ½ x 2'-0"	2 x 4 / 5/8	(-3¼)	7½"
34.2	6 x ½ x 2'-0"	2 x 4 / 5/8	(-3¼)	6¾"

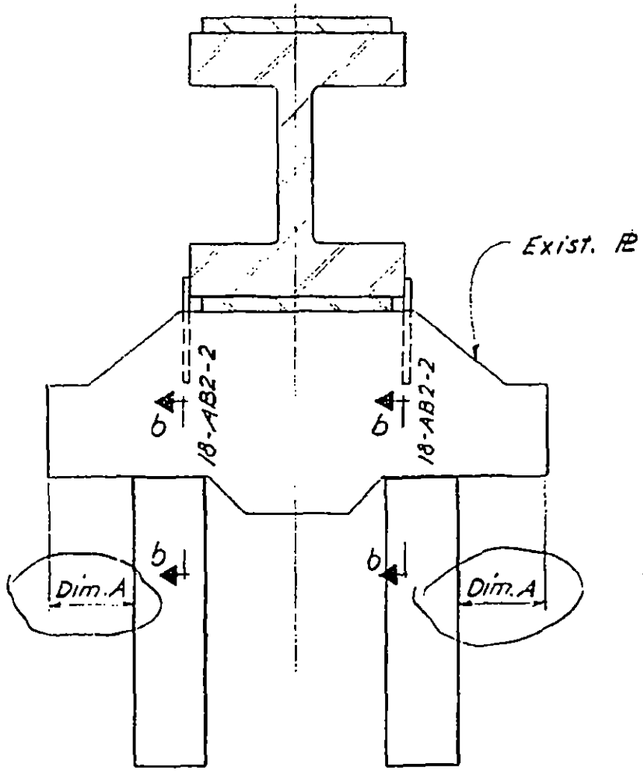

LICENSED PROFESSIONAL ENGINEER
LESLIE E. ROBERTSON
No. 34360
UNIVERSITY OF THE STATE OF NEW YORK

54

DESIGNED: [illegible]

DRAWN: F. Smith

REVIEWED: W. Brewer

18-AB2-34

SKILLING, HELLE, CHRISTIANSEN, ROBERTSON — Structural & Civil Engineers

PROJECT THE WORLD TRADE CENTER | TITLE STRAP ANCHORS - CORE - DETAIL 35 | DATE 2-7-69

REVISIONS

4-30-69

Detail No.	Strap	Studs	Elev.	Dim. A	Section (1)	Section (2)
35.1	4" × ½" × 4'-0"	⅝"	(-3½)	5"	C-C	C-C
35.2	4" × ½" × 4'-0"	⅝"	(-3½)	4½"	—	C-C
35.3	4" × ½" × 4'-0"	⅝"	(-3½)	½"	C-C	C-C
35.4	4" × ½" × 4'-0"	⅝"	(-3½)	½"	e-e	C-C

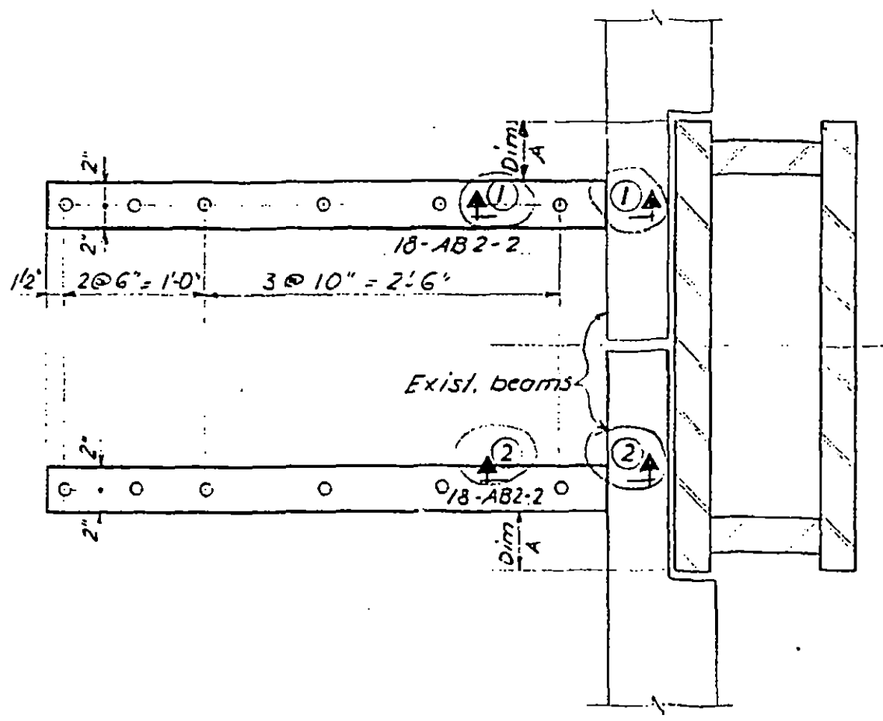

DETAIL 35.1, 35.3 & 35.4

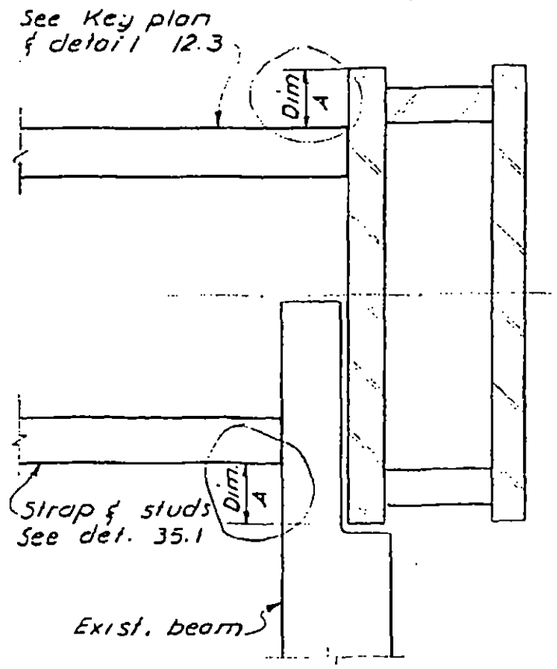

DETAIL 35.2

LICENSED PROFESSIONAL ENGINEER — LESLIE E. ROBERTSON — No. 34360 — UNIVERSITY OF THE STATE OF NEW YORK

SS

DESIGNED L. E. Robertson

DRAWN F. Smith

REVIEWED W. Brewer

18-AB2-35

SKILLING, HELLE, CHRISTIANSEN, ROBERTSON — Structural & Civil Engineers

PROJECT: THE WORLD TRADE CENTER | TITLE: STRAP ANCHOR - CORE - DETAIL 36 | DATE: 2-7-69

REVISIONS

4-30-69

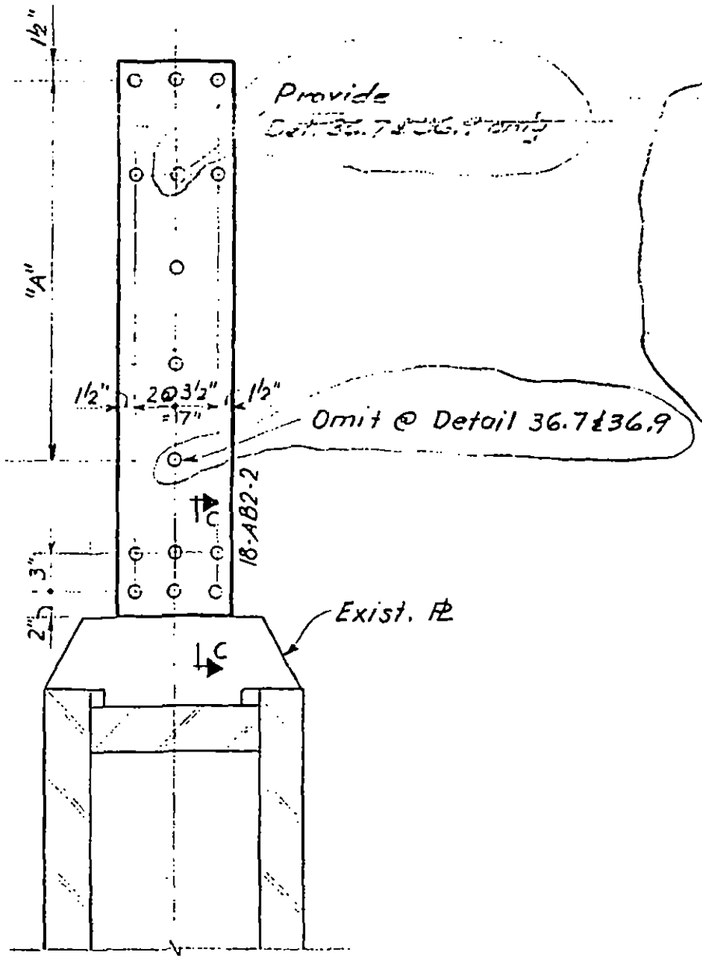

Detail No.	Strap	Studs	Elev.	"A"
36.1	10" x ½" x 3'-10½"	¾"	(-3½)	4 @ 8" = 2'-8"
36.2	10" x ½" x 3'-4½"	¾"	(-3½)	4 @ 7" = 2'-4"
36.3	10" x ½" x 3'-0½"	¾"	(-3½)	4 @ 6" = 2'-0"
36.4	10" x ½" x 2'-8½"	¾"	(-3½)	4 @ 5" = 1'-8"
36.5	10" x ½" x 3'-3½"	¾"	(-3½)	4 @ 7" = 2'-4"
36.6	10" x ½" x 2'-4½"	¾"	(-3½)	4 @ 4" = 1'-4"
36.7	10" x ½" x 1'-8½"	¾"	(-3½)	3 @ 3½" = 10½"
36.8	10" x ½" x 2'-7½"	¾"	(-3½)	4 @ 4¾" = 1'-7"
36.9	10" x ½" x 1'-10½"	¾"	(-3½)	4 @ 3" = 1'-0"
36.10	10" x ½" x 2'-9½"	¾"	(-3½)	4 @ 5" = 1'-8"
36.11	10" x ½" x 3'-6½"	¾"	(-3½)	4 @ 7" = 2'-4"

LICENSED PROFESSIONAL ENGINEER — LESLIE E. ROBERTSON — No. 34360 — UNIVERSITY OF THE STATE OF NEW YORK

56

DESIGNED: [illegible]

DRAWN: F. Smith

REVIEWED: W. Brewer

18-AB2-36

SKILLING, HELLE, CHRISTIANSEN, ROBERTSON — Structural & Civil Engineers

PROJECT: THE WORLD TRADE CENTER | TITLE: STRAP ANCHORS - CORE - DETAIL 37 | DATE: 2-7-69

REVISIONS

4-30-69

Detail No.	"A"
37 A	8@6" = 4'-0"
37 B	8@7" = 4'-8"
37 C	8@7½" = 5'-0"
37 D	8@8" = 5'-4"
37 E	8@9" = 6'-0"

Floor side

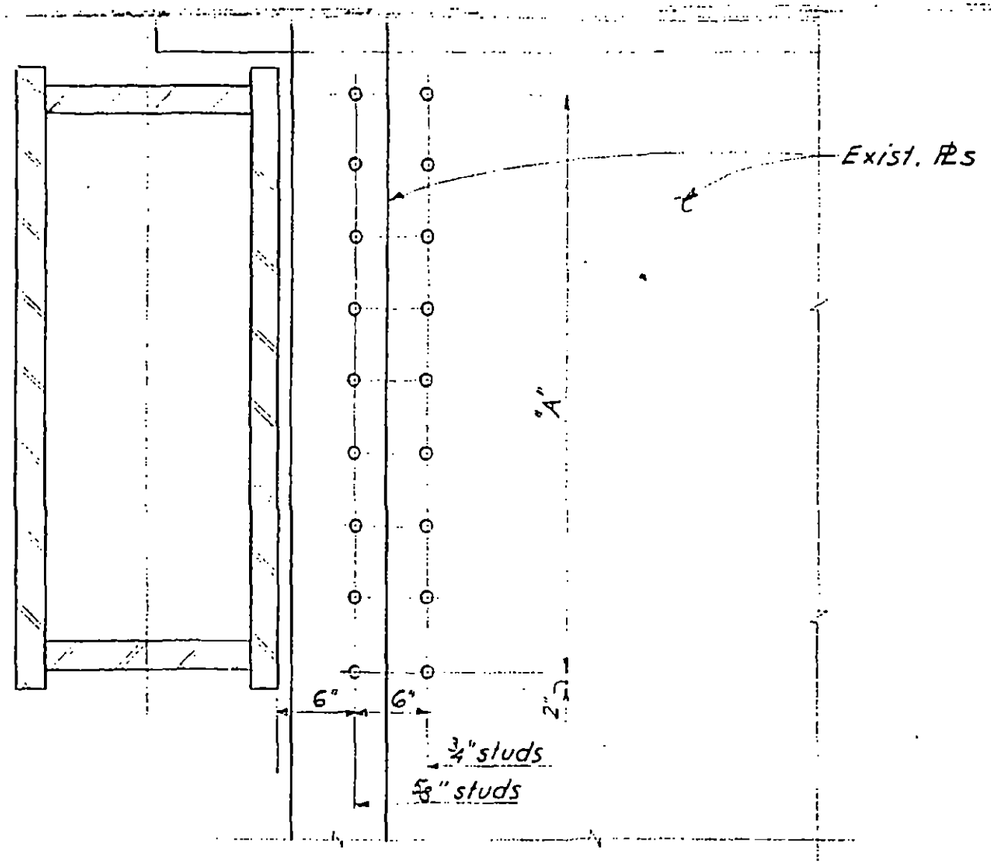

Core side

LICENSED PROFESSIONAL ENGINEER
LESLIE E. ROBERTSON
No. 34360
UNIVERSITY OF THE STATE OF NEW YORK

37

DESIGNED: L. Robertson

DRAWN: F. Smith

REVIEWED: W. Brewer

18-AB2 - 37

SKILLING, HELLE, CHRISTIANSEN, ROBERTSON — Structural & Civil Engineers

PROJECT THE WORLD TRADE CENTER | TITLE STRAP ANCHOR - CORE - DETAIL 38 | DATE 2-7-69

REVISIONS

4-30-69

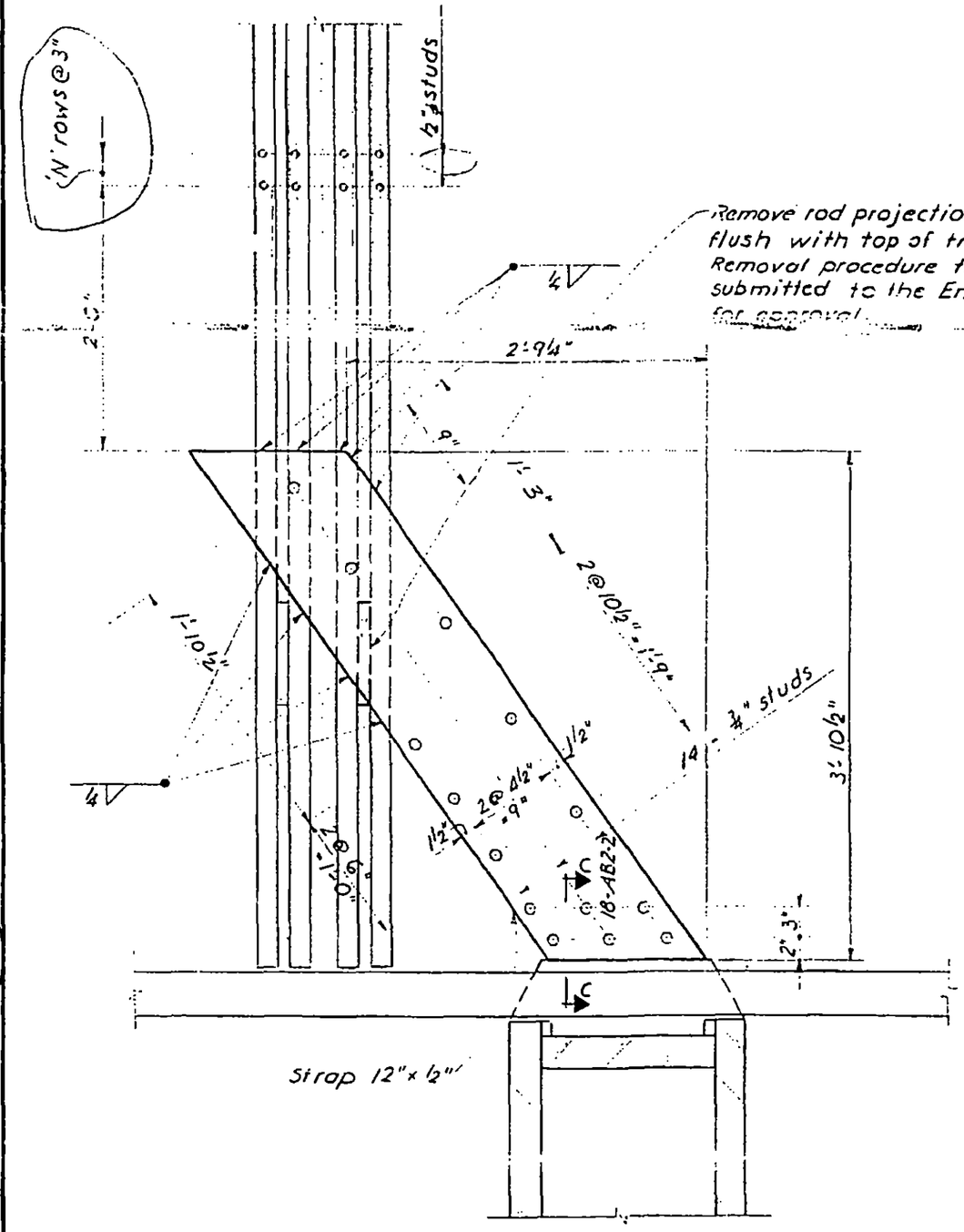

Detail No	N
38.1	2
38.2	1

LICENSED PROFESSIONAL ENGINEER — LESLIE E. ROBERTSON — No. 34360 — UNIVERSITY OF THE STATE OF NEW YORK

58

DESIGNED L E Robertson

DRAWN F. Smith

REVIEWED W. Brewer

18-ABZ-38

SKILLING, HELLE, CHRISTIANSEN, ROBERTSON — Structural & Civil Engineers

PROJECT: THE WORLD TRADE CENTER | TITLE: STRAP ANCHOR - CORE - DETAIL 39 | DATE: 2-7-69

REVISIONS

4/30/69

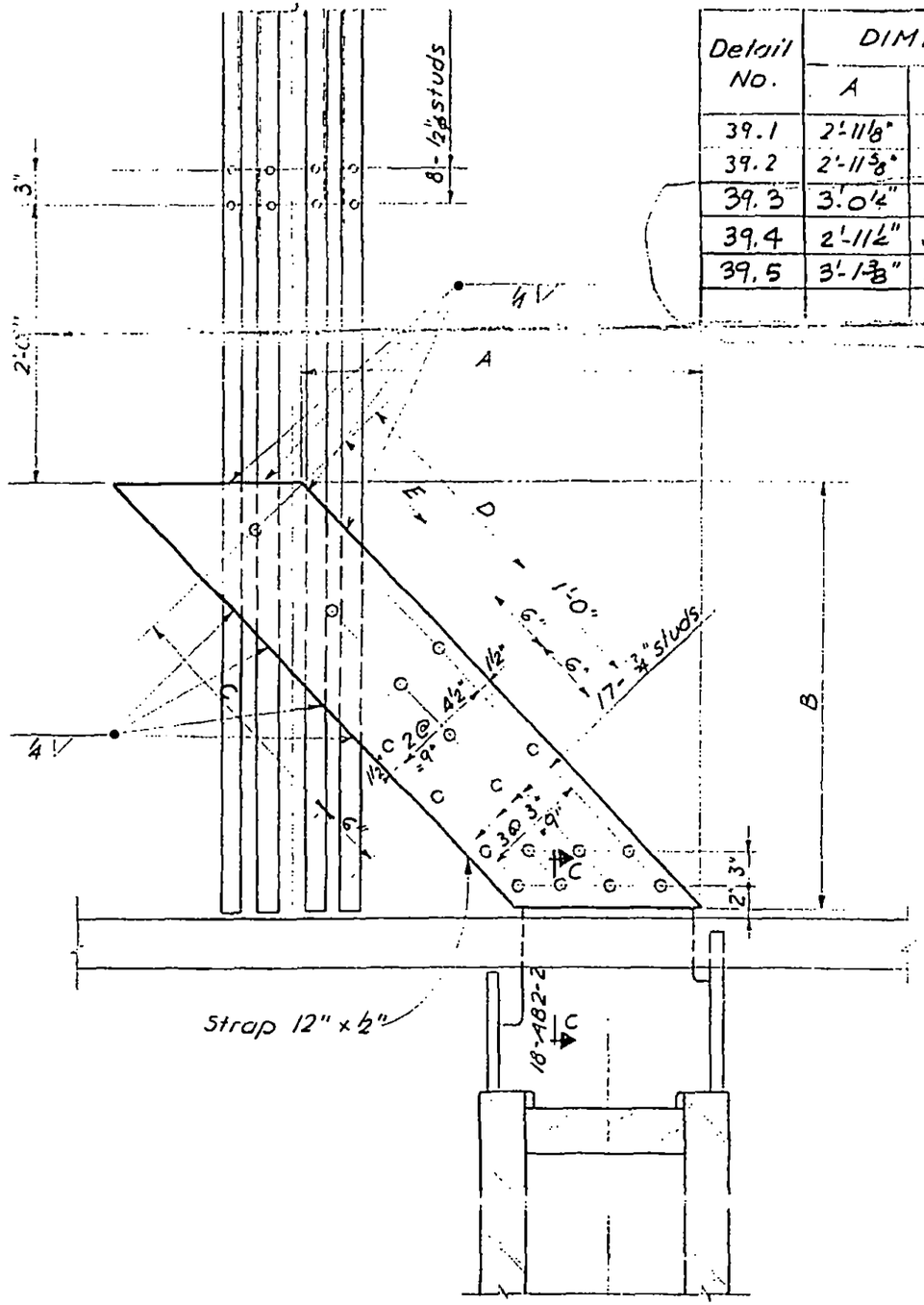

Detail No.	DIMENSION SCHEDULE				
	A	B	C	D	E
39.1	2'-11 1/8"	3'-4 1/2"	1'-9"	1'-6"	1'-0"
39.2	2'-11 5/8"	3'-0 1/2"	1'-6"	1'-3"	10"
39.3	3'-0 1/4"	2'-7 1/2"	1'-4"	1'-2"	9"
39.4	2'-11 1/2"	3'-3 1/2"	1'-8"	1'-5"	1'-0"
39.5	3'-1 3/8"	1'-10 1/2"	1'-0"	0'-10"	7"

LICENSED PROFESSIONAL ENGINEER
LESLIE E. ROBERTSON
No. 34360
UNIVERSITY OF THE STATE OF NEW YORK

DESIGNED: L. O'Neill

DRAWN: F. Smith

REVIEWED: W. Brewer

18-AB2-39

SKILLING, HELLE, CHRISTIANSEN, ROBERTSON — Structural & Civil Engineers

PROJECT: THE WORLD TRADE CENTER | TITLE: STRAP ANCHOR - CORE - DETAIL 40 | DATE: 4/30/69

REVISIONS

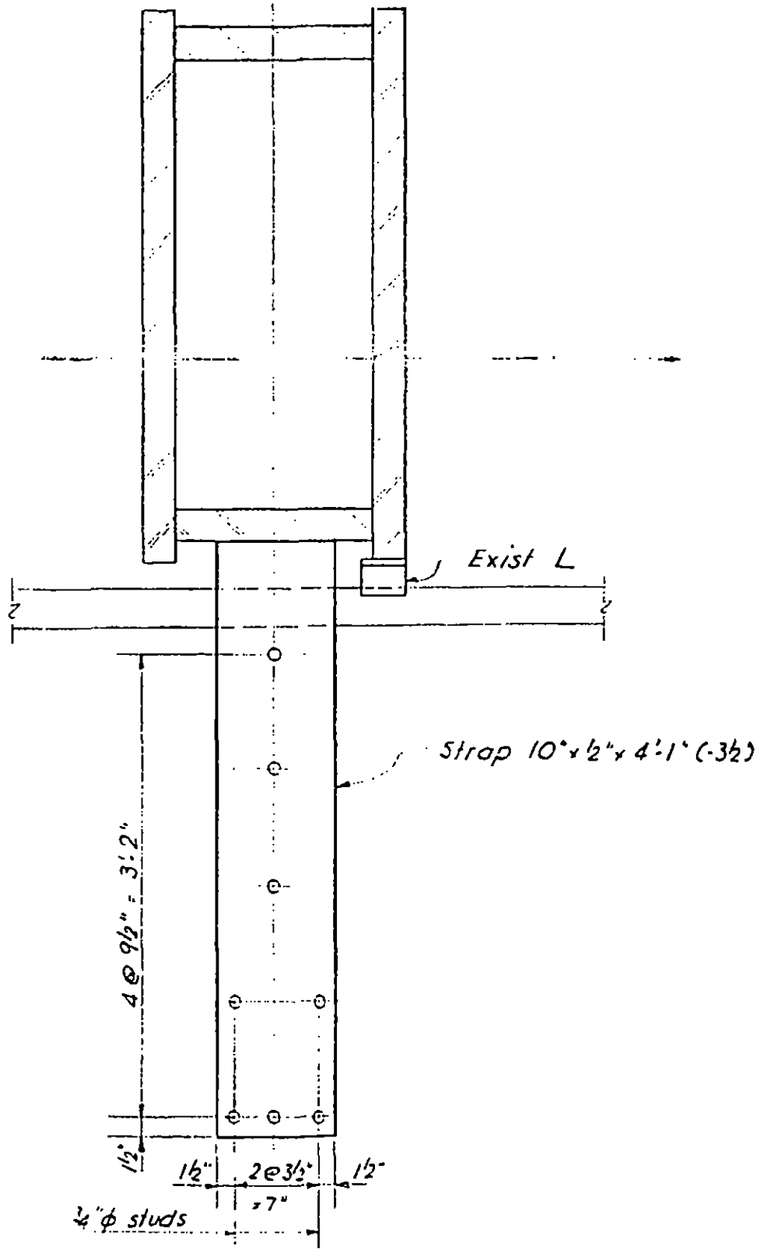

LICENSED PROFESSIONAL ENGINEER
LESLIE E. ROBERTSON
No. 34360
UNIVERSITY OF THE STATE OF NEW YORK

DRAWN: F. Smith

REVIEWED: W. Brewer

18 - AB2 - 40

1044-2, 2

SKILLING, HELLE, CHRISTIANSEN, ROBERTSON — Structural & Civil Engineers

PROJECT THE WORLD TRADE CENTER | TITLE STRAP ANCHOR CORE DETAIL 41A THRU 41G | DATE 4-30-69

REVISIONS

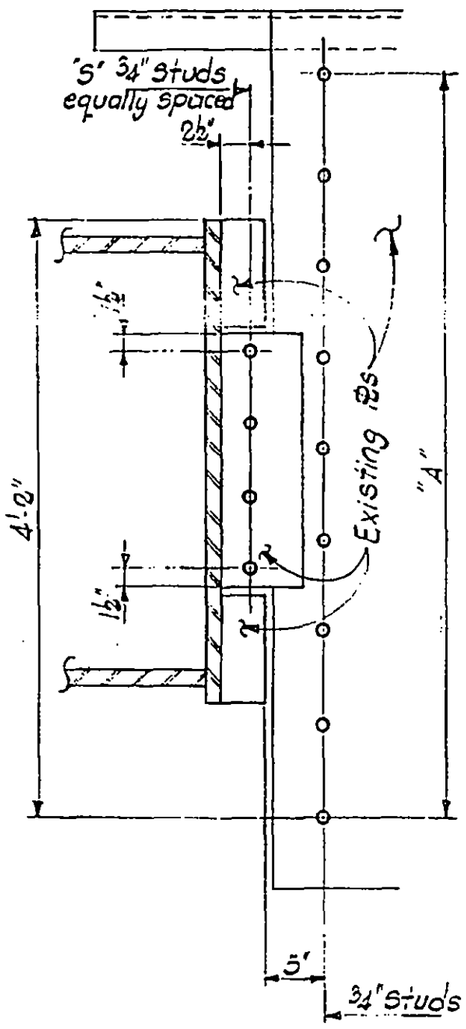

DETAIL 41A THRU 41D

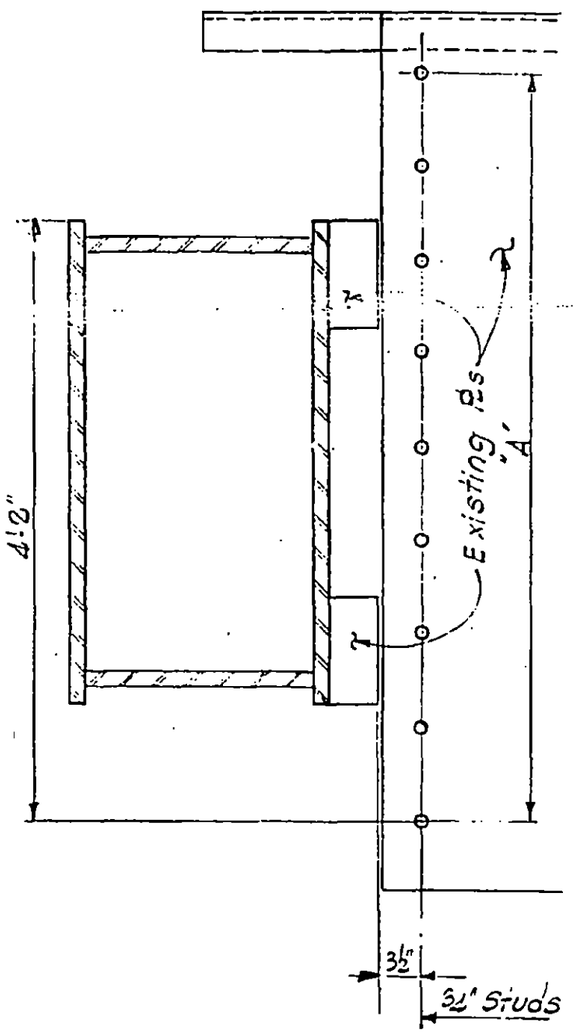

DETAIL 41E & 41F

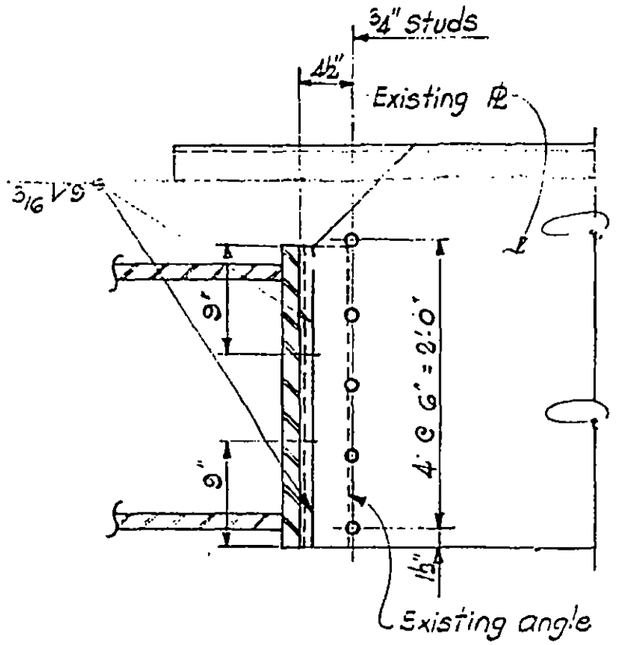

DETAIL 41G

DETAIL No.	"A"	"S"
41A	8 @ 6" = 4'-0"	4
41B	8 @ 7" = 4'-8"	3
41C	8 @ 8½" = 5'-6"	3
41D	8 @ 9½" = 6'-4"	3
41E	8 @ 9½" = 6'-4"	—
41F	8 @ 7½" = 5'-0"	—

LICENSED PROFESSIONAL ENGINEER — LESLIE E. ROBERTSON — No. 34360 — UNIVERSITY OF THE STATE OF NEW YORK

61

DESIGNED

DRAWN S.T.M.

REVIEWED W. Brewer

18-AB2-41

SKILLING, HELLE, CHRISTIANSEN, ROBERTSON — Structural & Civil Engineers

PROJECT: THE WORLD TRADE CENTER | TITLE: STRAP ANCHOR - CORE - DETAIL 42 | DATE: 4/30/69

REVISIONS

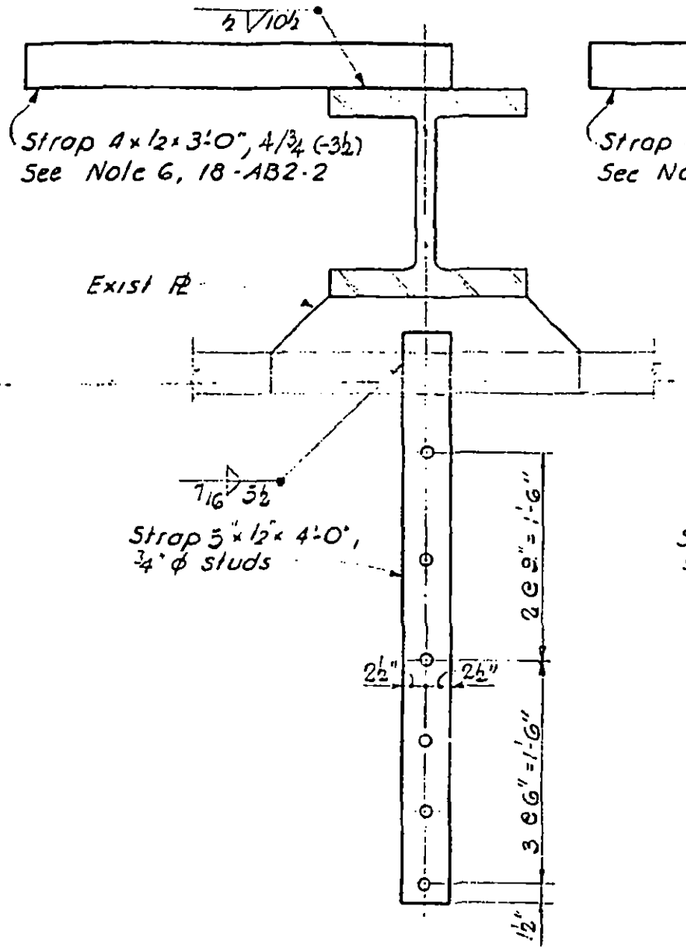

DETAIL 42.1

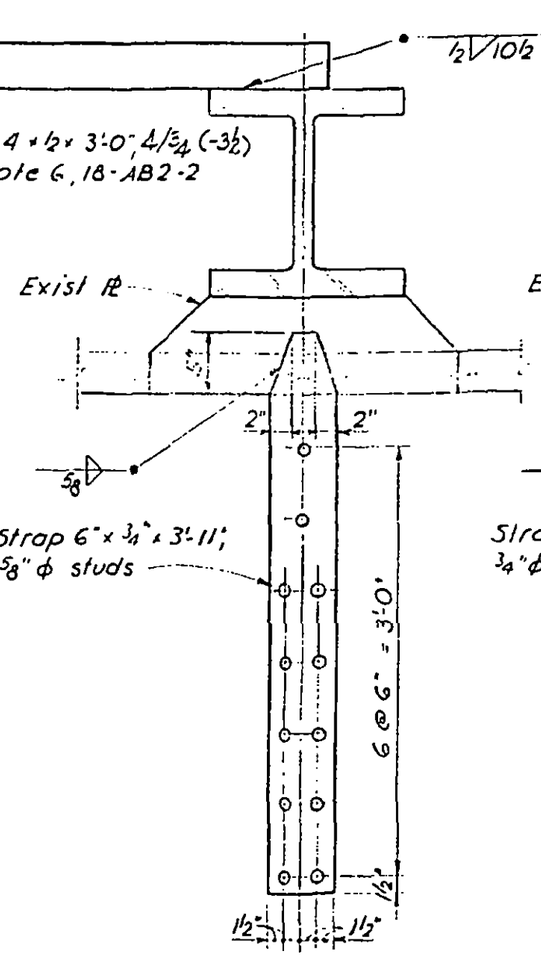

DETAIL 42.2

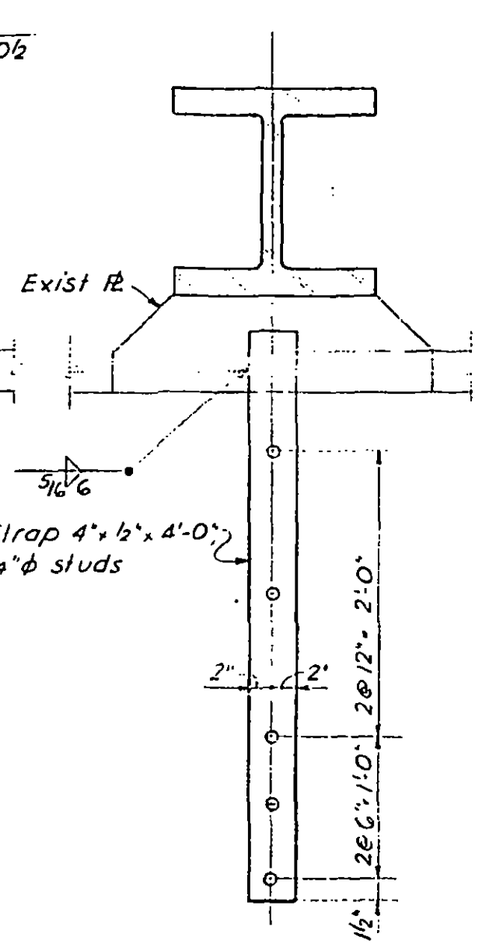

DETAIL 42.3

LICENSED PROFESSIONAL ENGINEER — LESLIE E. ROBERTSON — No. 34360 — UNIVERSITY OF THE STATE OF NEW YORK

DESIGNED: LY

DRAWN: F. Smith

REVIEWED: W. Brewer

18-AB2-42.1

SKILLING, HELLE, CHRISTIANSEN, ROBERTSON — Structural & Civil Engineers

PROJECT THE WORLD TRADE CENTER | TITLE STRAP ANCHOR CORE DETAIL 42 | DATE 4/30/69

REVISIONS

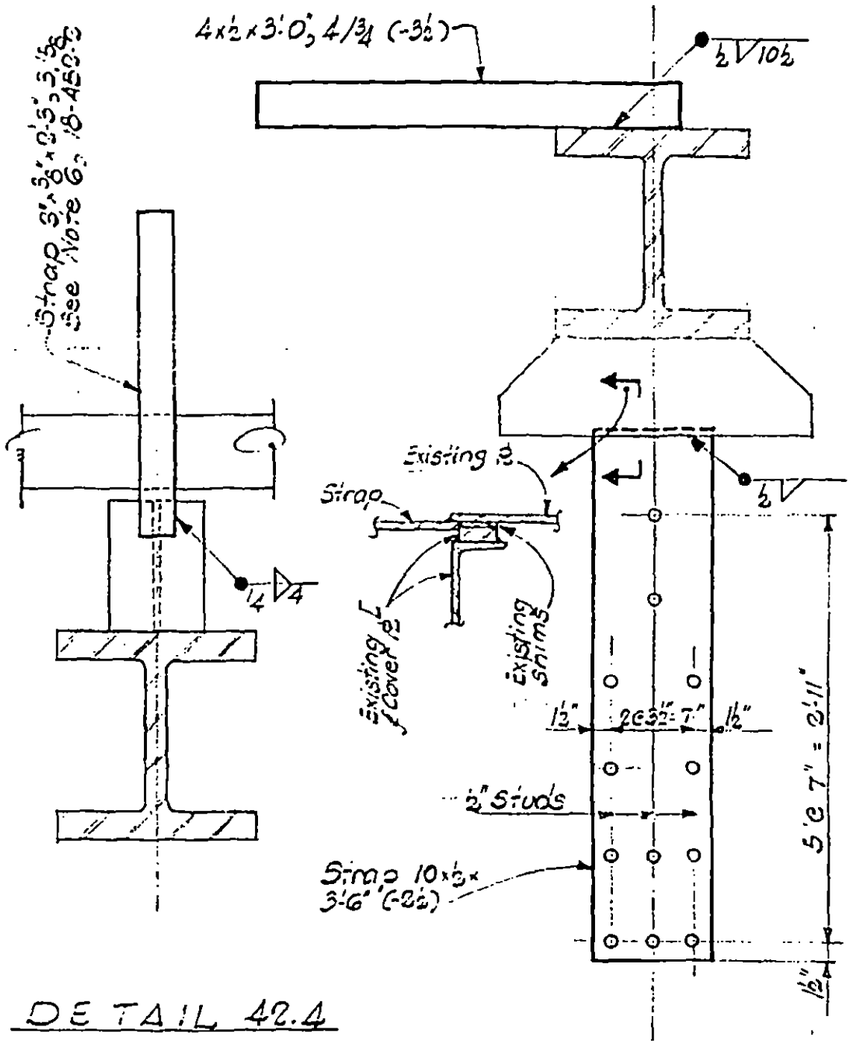

DETAIL 42.4

DETAIL 42.5

DETAIL 42.6

LICENSED PROFESSIONAL ENGINEER — LESLIE E. ROBERTSON — No. 34360 — UNIVERSITY OF THE STATE OF NEW YORK

63

DESIGNED

DRAWN S.T.M.

REVIEWED W. Brewer

18-A82-42.2

SKILLING, HELLE, CHRISTIANSEN, ROBERTSON — Structural & Civil Engineers

PROJECT THE WORLD TRADE CENTER | TITLE STRAP ANCHOR DETAIL 42 | DATE 4/30/69

REVISIONS

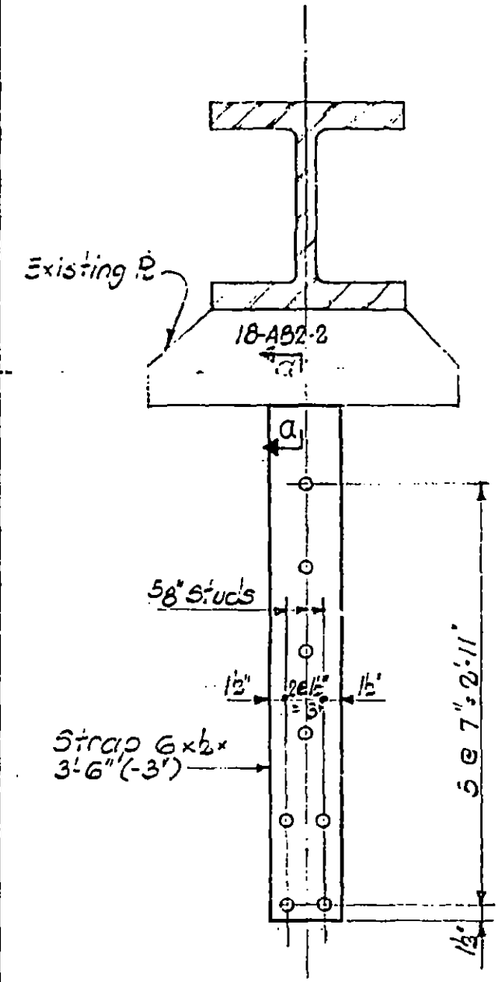

DETAIL 42.7

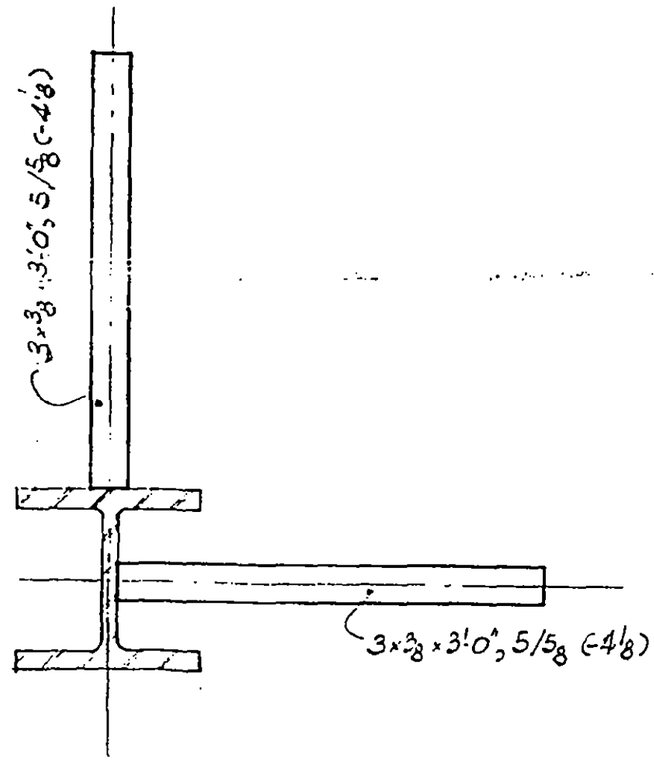

DETAIL 42.8

LICENSED PROFESSIONAL ENGINEER
LESLIE E. ROBERTSON
No. 34360
UNIVERSITY OF THE STATE OF NEW YORK

64
DESIGNED

DRAWN
S.T.M.

REVIEWED
W. Brewer

18-A82-42.3

SKILLING, HELLE, CHRISTIANSEN, ROBERTSON — Structural & Civil Engineers

PROJECT THE WORLD TRADE CENTER | TITLE STRAP ANCHOR DETAIL 43 | DATE 4/30/69

REVISIONS

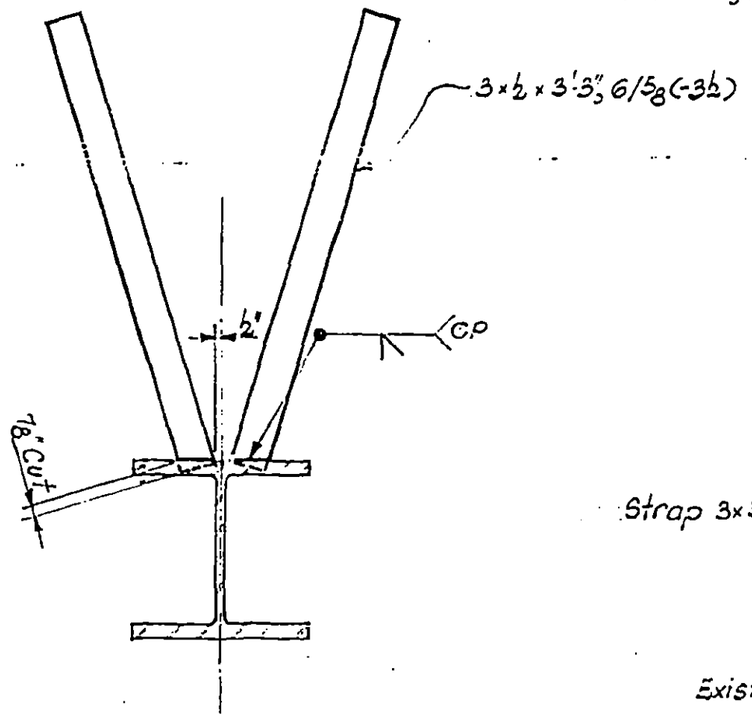

DETAIL 43.1

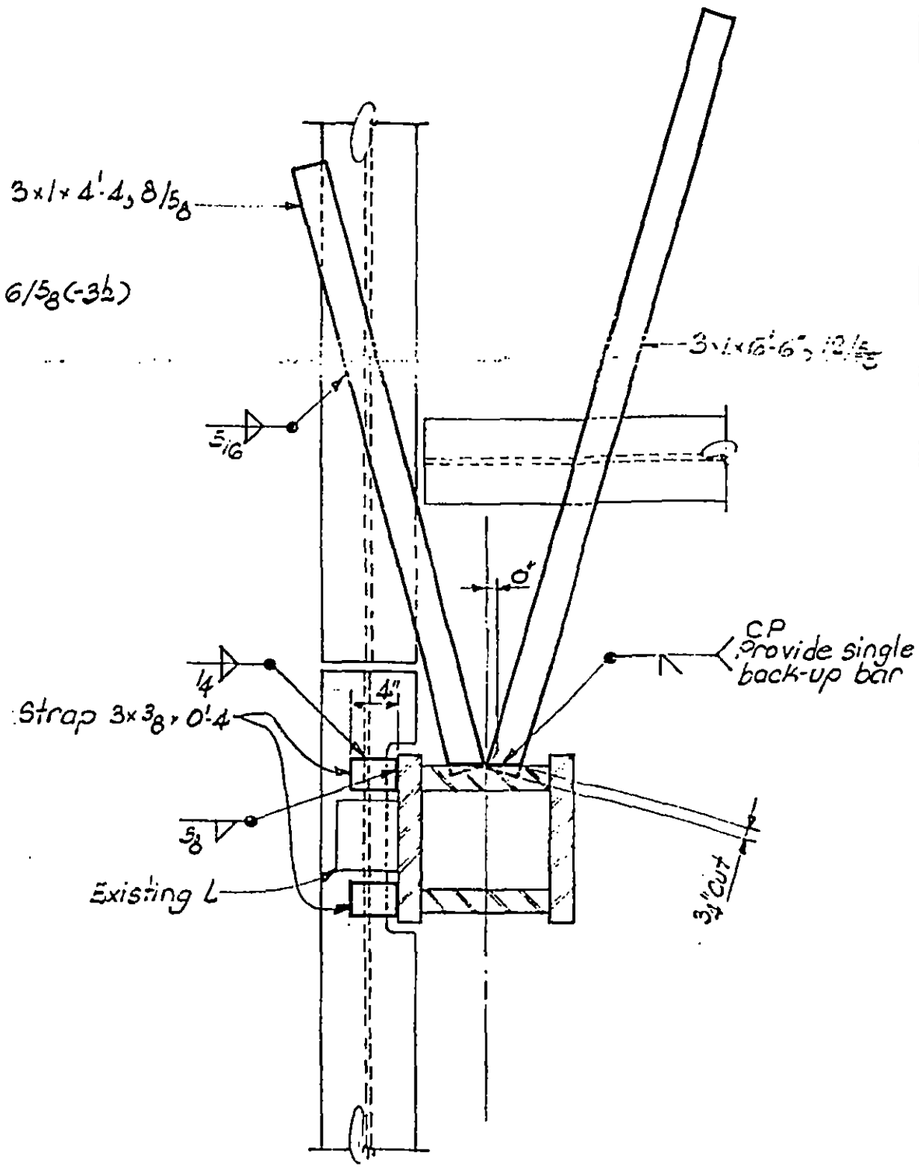

DETAIL 43.2

LICENSED PROFESSIONAL ENGINEER
LESLIE E. ROBERTSON
No. 34360
UNIVERSITY OF THE STATE OF NEW YORK

65
DESIGNED

DRAWN
S.T.M.

REVIEWED
W. Brewer

18-AB2-43

SKILLING, HELLE, CHRISTIANSEN, ROBERTSON — Structural & Civil Engineers

PROJECT: THE WORLD TRADE CENTER | TITLE: STRAP ANCHOR - CORE - DETAIL 44 | DATE: 5-20.69

REVISIONS

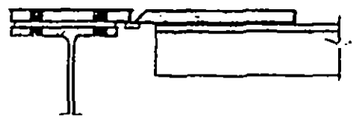

Section a-a

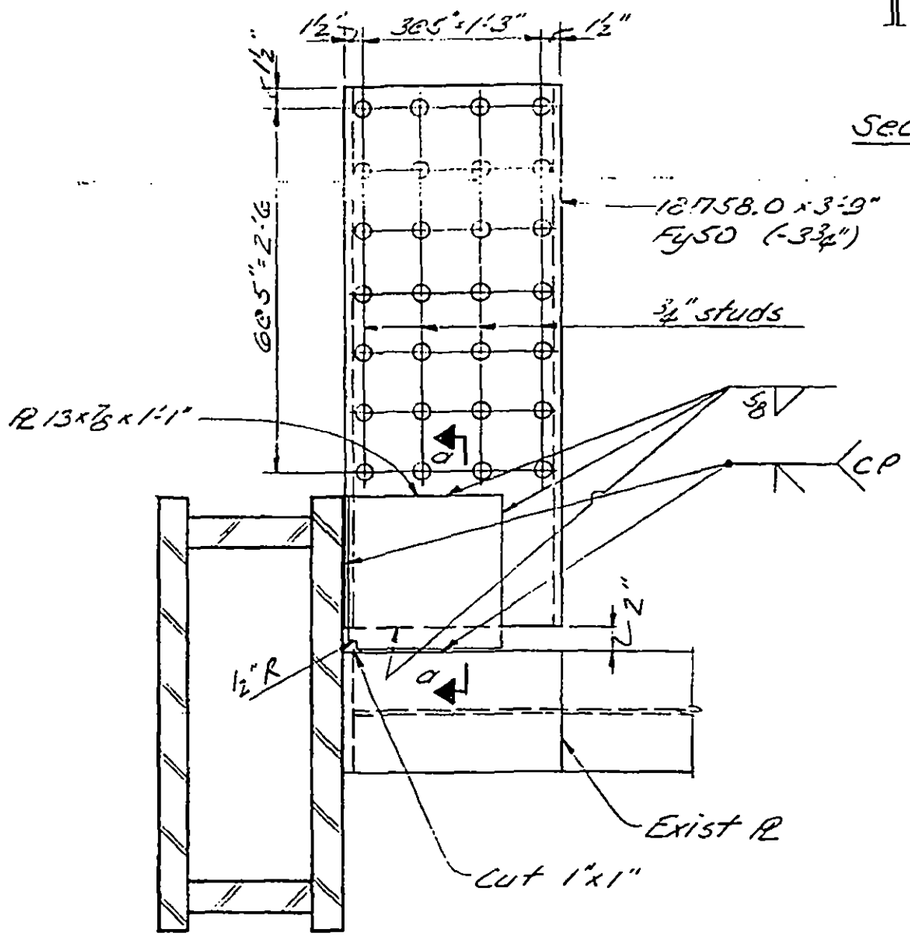

PLAN

LICENSED PROFESSIONAL ENGINEER
LESLIE E. ROBERTSON
No. 34360
UNIVERSITY OF THE STATE OF NEW YORK

DESIGNED W. Brewer
DRAWN J. Adams
REVIEWED W. Brewer

18-ABZ-44

SKILLING, HELLE, CHRISTIANSEN, ROBERTSON — Structural & Civil Engineers

PROJECT THE WORLD TRADE CENTER | TITLE STRAP ANCHORS - CORE - DETAIL 50- | DATE 10/16/68

REVISIONS

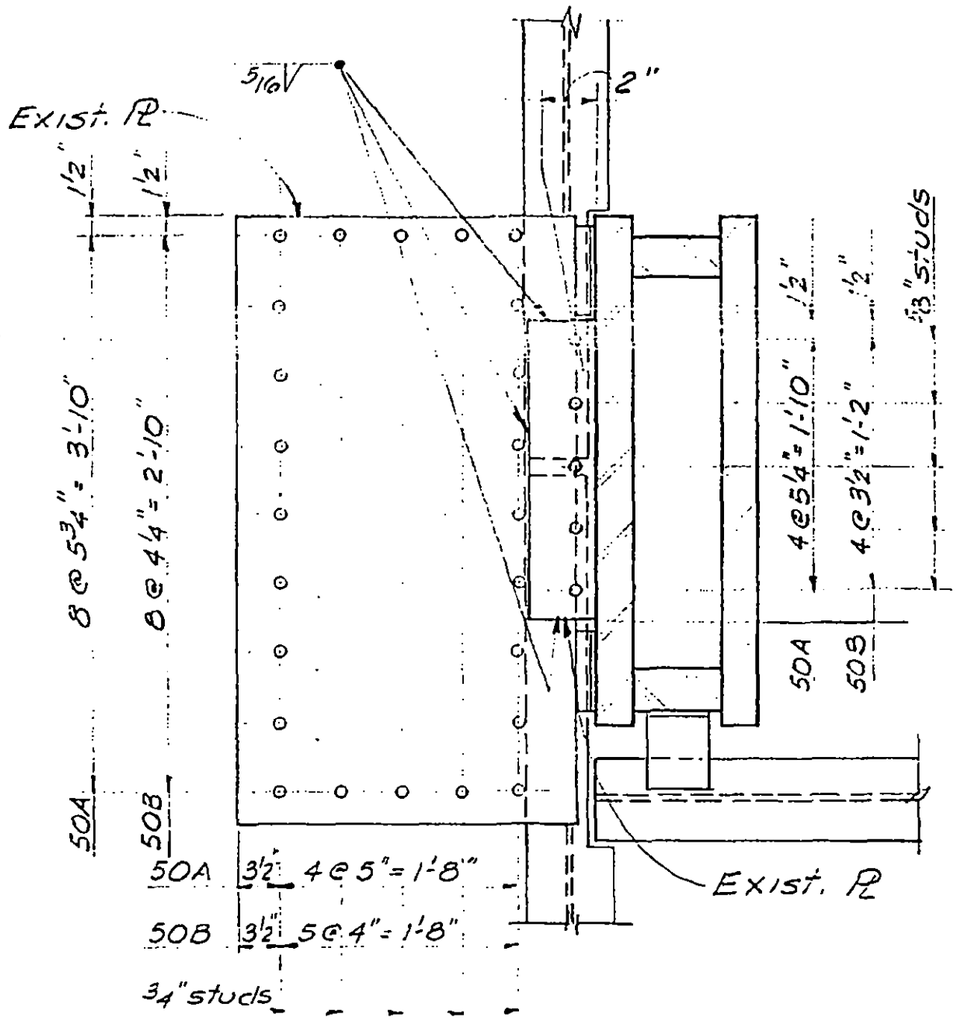

DETAILS 50A, 50B

LICENSED PROFESSIONAL ENGINEER — LESLIE E. ROBERTSON — No. 34360 — UNIVERSITY OF THE STATE OF NEW YORK

DESIGNED L. Ellis

DRAWN S. Wexler

REVIEWED W. Brewer

18-AB2-50.1

SKILLING, HELLE, CHRISTIANSEN, ROBERTSON — Structural & Civil Engineers

PROJECT THE WORLD TRADE CENTER | TITLE STRAP ANCHORS - CORE - DETAIL 50 | DATE 10/16/68

REVISIONS

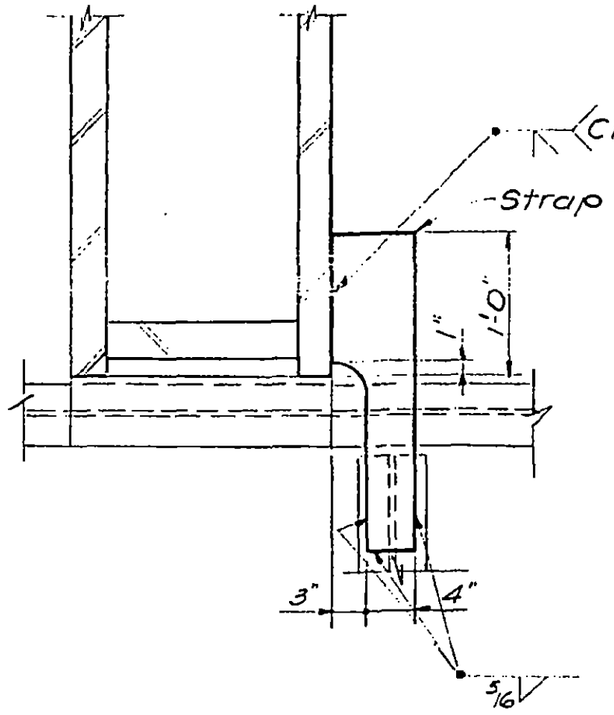

DETAIL 50C

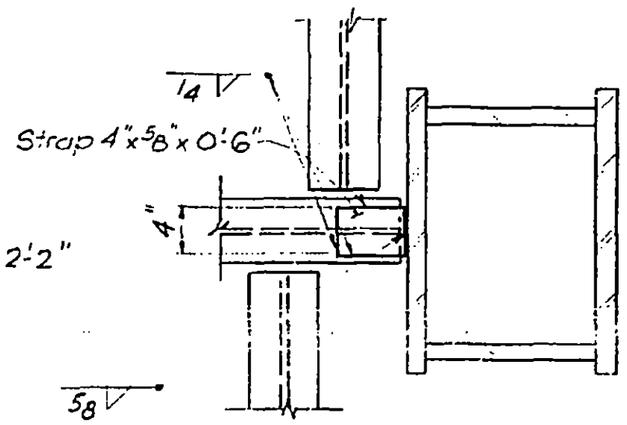

DETAIL 50D

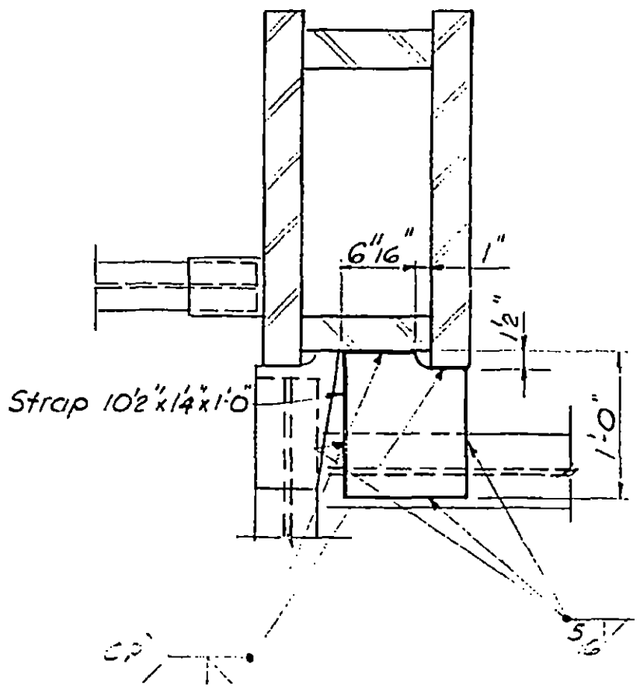

DETAIL 50E

LICENSED PROFESSIONAL ENGINEER
LESLIE E. ROBERTSON
No. 34360
UNIVERSITY OF THE STATE OF NEW YORK

DESIGNED L. O'Neill
DRAWN S. Wexler
REVIEWED W. Brewer

18-AB2-50.2

SKILLING, HELLE, CHRISTIANSEN, ROBERTSON — Structural & Civil Engineers

PROJECT: THE WORLD TRADE CENTER | TITLE: STRAP ANCHORS - CORE - DETAIL 54 | DATE: 12-13-68

REVISIONS

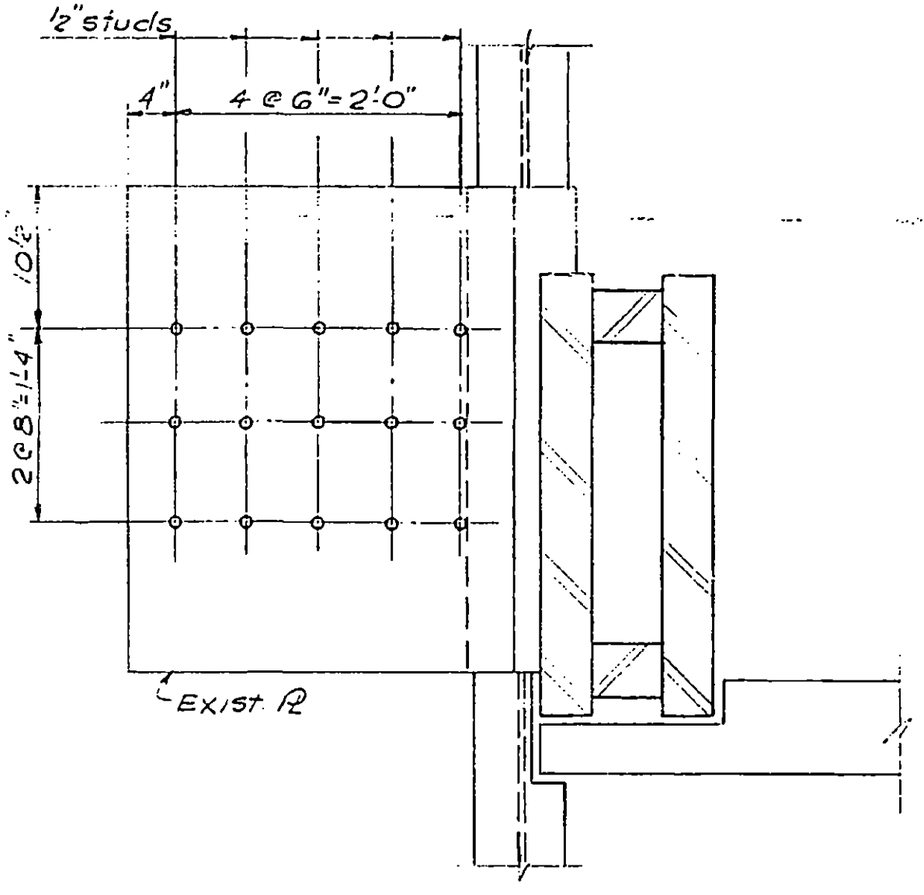

DETAIL 54A

DESIGNED: O'Hanel
DRAWN: S. Wexler
REVIEWED:

18-AB2-54.1

SKILLING, HELLE, CHRISTIANSEN, ROBERTSON — Structural & Civil Engineers

PROJECT THE WORLD TRADE CENTER | TITLE STRAP ANCHORS - CORE - DETAIL 54 | DATE 12-13-68

REVISIONS

5-20-69

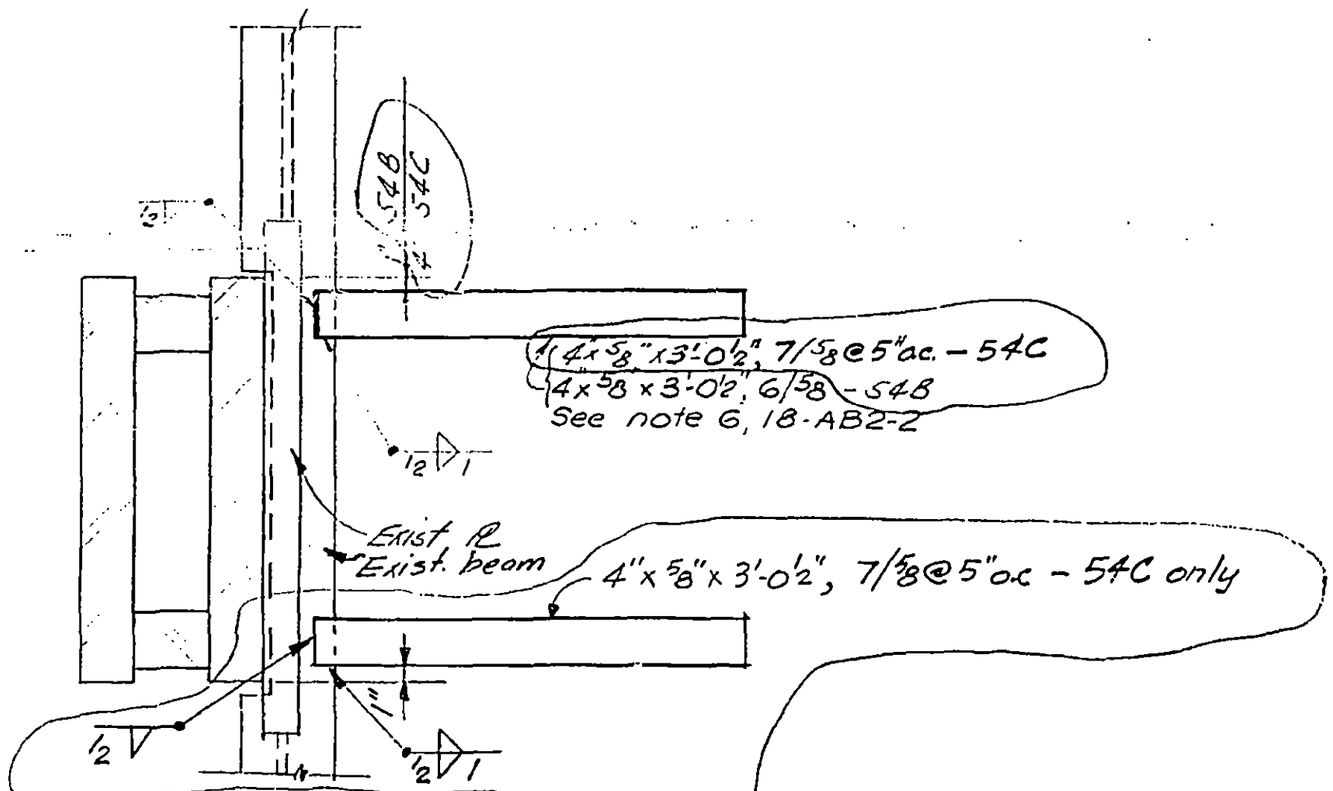

DETAIL 54B & C

LICENSED PROFESSIONAL ENGINEER
LESLIE E. ROBERTSON
No. 34360
UNIVERSITY OF THE STATE OF NEW YORK

DESIGNED L. O'Hara

DRAWN S. Wexler

REVIEWED W. Brewer

18-AB2-54.2

SKILLING, HELLE, CHRISTIANSEN, ROBERTSON — Structural & Civil Engineers

PROJECT: THE WORLD TRADE CENTER | TITLE: STRAP ANCHORS - CORE - DETAIL 55 | DATE: 12-13-68

REVISIONS

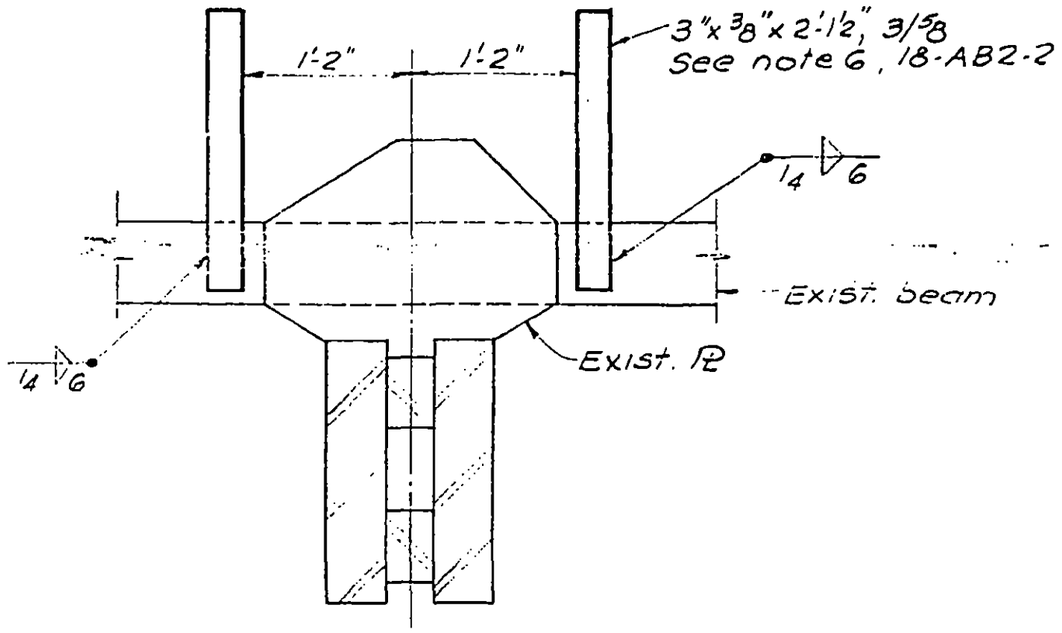

LICENSED PROFESSIONAL ENGINEER
LESLIE E. ROBERTSON
No. 34360
UNIVERSITY OF THE STATE OF NEW YORK

DESIGNED: J O'Neil
DRAWN: S. Wexler
REVIEWED:

18-AB2-55

SKILLING, HELLE, CHRISTIANSEN, ROBERTSON — Structural & Civil Engineers

PROJECT THE WORLD TRADE CENTER | TITLE STRAP ANCHORS - CORE - DETAIL 56 | DATE 12-13-68

REVISIONS

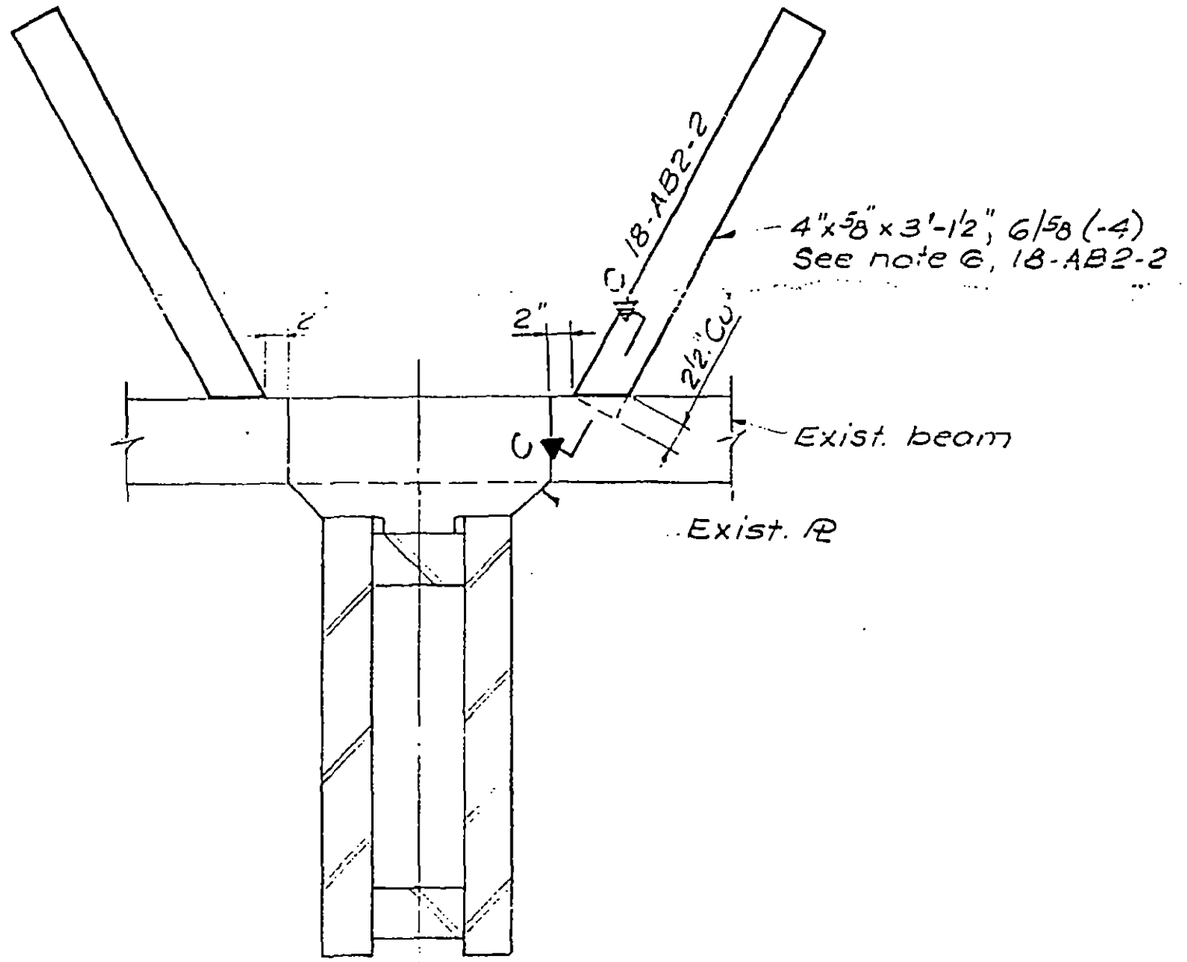

LICENSED PROFESSIONAL ENGINEER
LESLIE E. ROBERTSON
No. 34360
UNIVERSITY OF THE STATE OF NEW YORK

DESIGNED
L. E. Robertson

DRAWN
S. Wexler

REVIEWED

18-AB2-56

SKILLING, HELLE, CHRISTIANSEN, ROBERTSON — Structural & Civil Engineers

PROJECT THE WORLD TRADE CENTER | TITLE STRAP ANCHORS - CORE - DETAIL 57 | DATE 12-13-68

REVISIONS

10-1-69

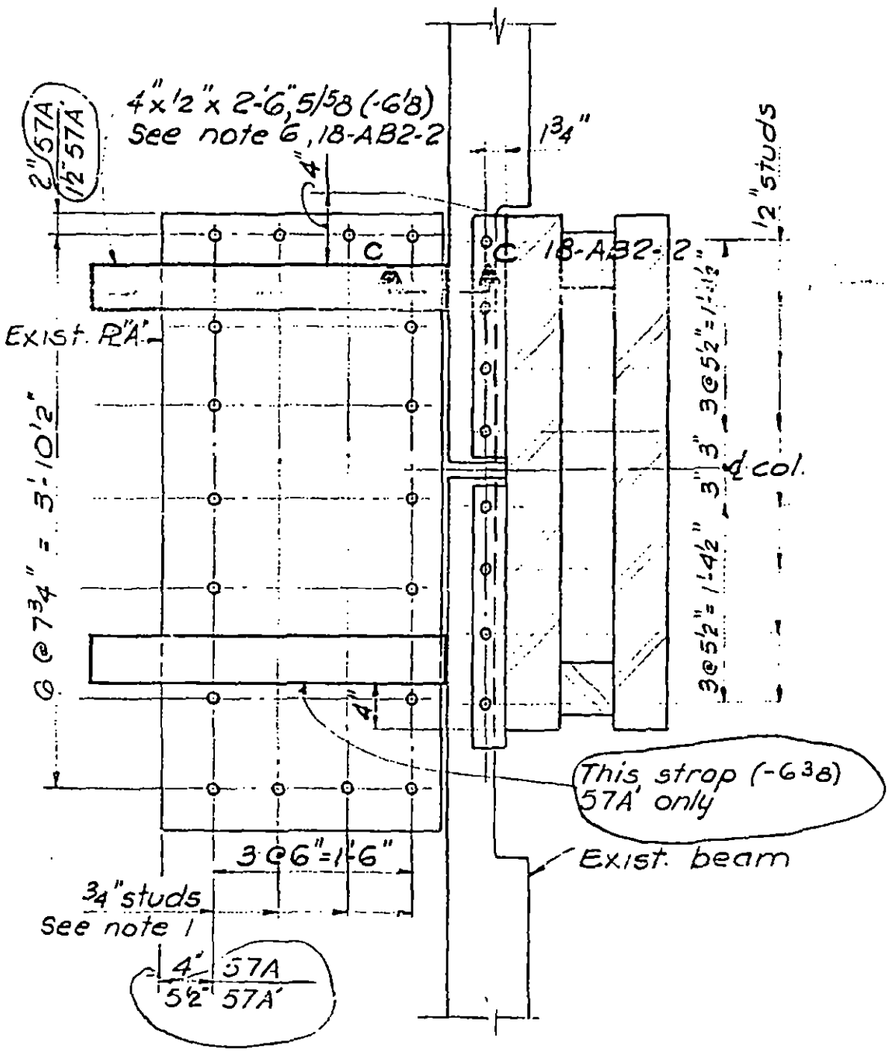

DETAIL 57A, 57A'

Note 1 - Studs to be placed on exist. P2 "A" prior to installation of straps.

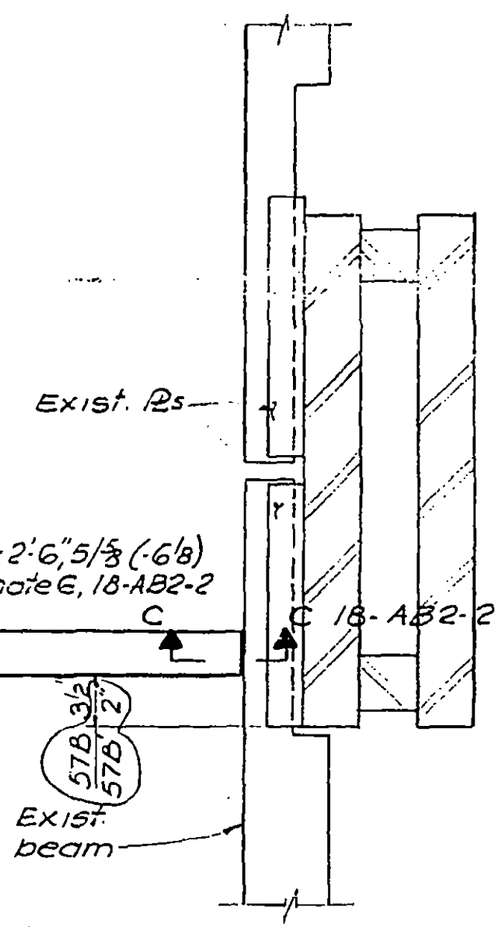

DETAIL 57B, 57B'

LICENSED PROFESSIONAL ENGINEER
LESLIE E. ROBERTSON
No. 34360
UNIVERSITY OF THE STATE OF NEW YORK

DESIGNED
DRAWN S. Wexler
REVIEWED

18-AB2-57.1

SKILLING, HELLE, CHRISTIANSEN, ROBERTSON — Structural & Civil Engineers

PROJECT THE WORLD TRADE CENTER | TITLE STRAP ANCHORS - CORE - DETAIL 57 | DATE 12-13-68

REVISIONS

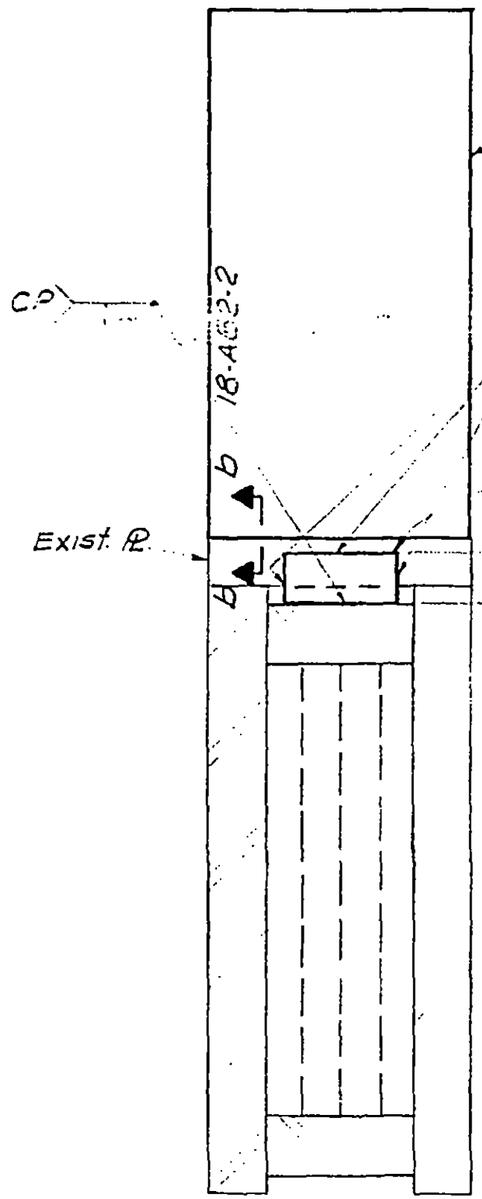

DETAIL 57C

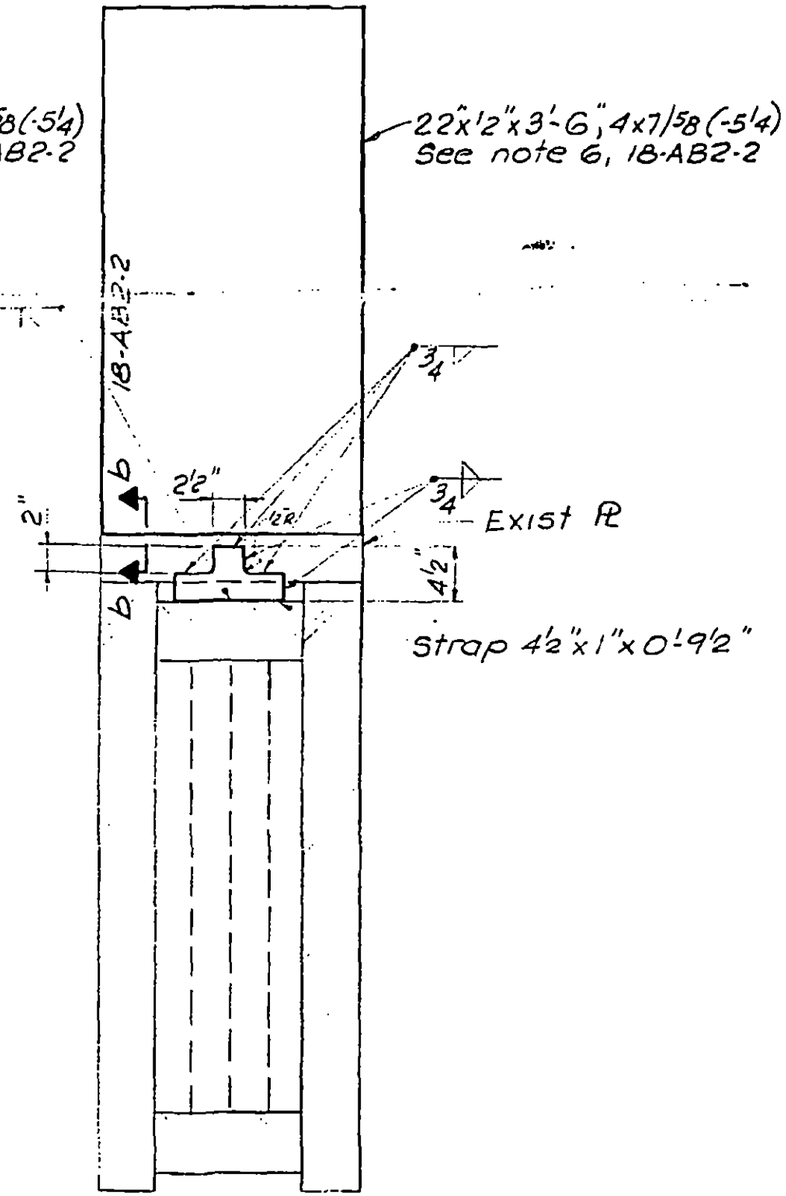

DETAIL 57D

LICENSED PROFESSIONAL ENGINEER — LESLIE E. ROBERTSON — No. 34360 — UNIVERSITY OF THE STATE OF NEW YORK

DESIGNED L. E. Robertson

DRAWN S. Wexler

REVIEWED

18-AB2-57.2

SKILLING, HELLE, CHRISTIANSEN, ROBERTSON — Structural & Civil Engineers

PROJECT THE WORLD TRADE CENTER | TITLE STRAP ANCHORS - CORE - DETAIL 57 | DATE 12-13-68

REVISIONS

10-1-69

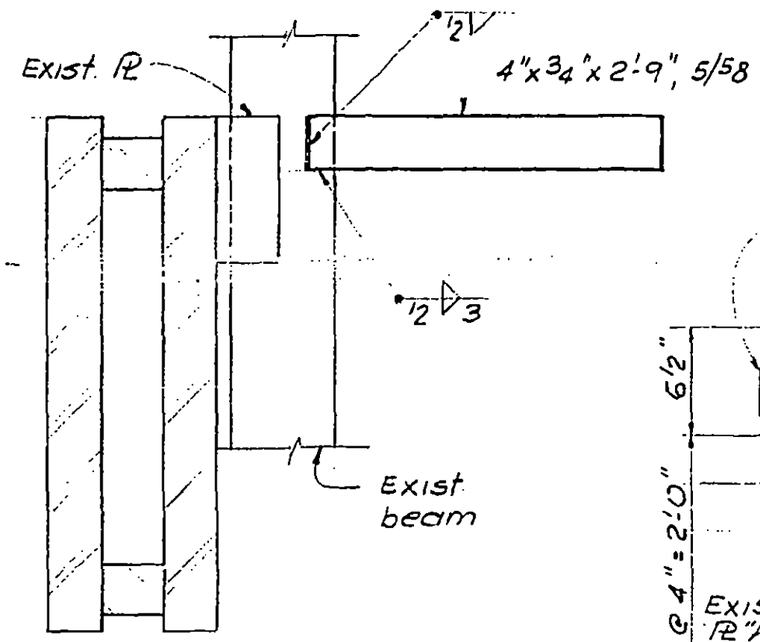

DETAIL 57E

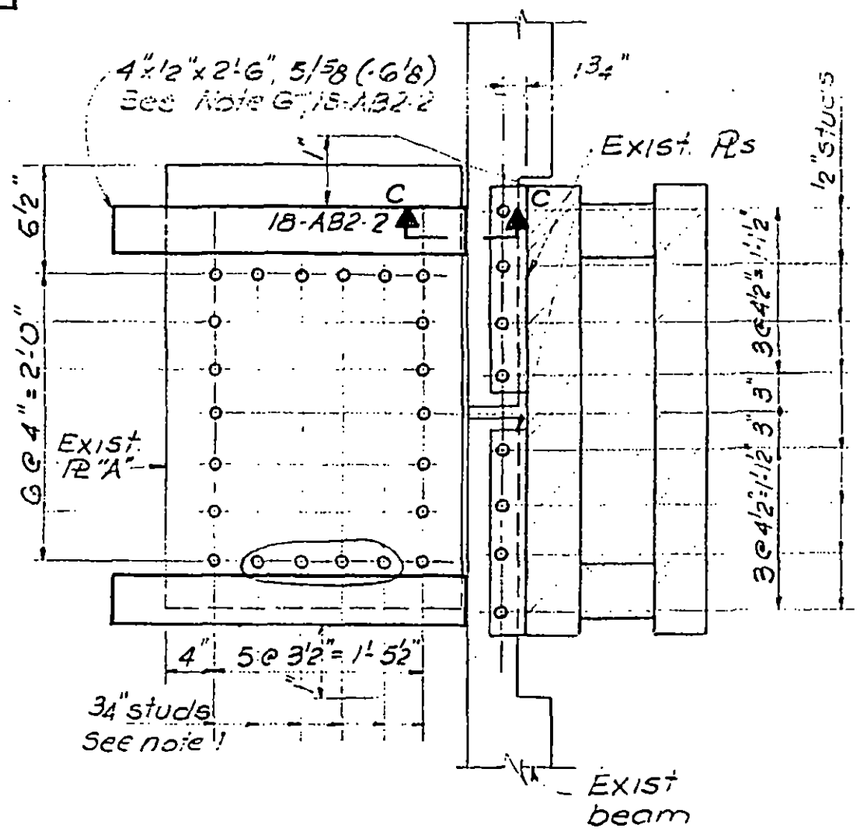

DETAIL 57F

Note 1 - Studs to be placed on exist. ℄ "A" prior to installation of straps.

LICENSED PROFESSIONAL ENGINEER
LESLIE E. ROBERTSON
No. 34360
UNIVERSITY OF THE STATE OF NEW YORK

DESIGNED L.E.R.
DRAWN S. Wexler
REVIEWED

18-AB2-57.3

SKILLING, HELLE, CHRISTIANSEN, ROBERTSON — Structural & Civil Engineers

PROJECT: THE WORLD TRADE CENTER | TITLE: STRAP ANCHORS-CORE - DETAIL 57 | DATE: 12-13-68

REVISIONS

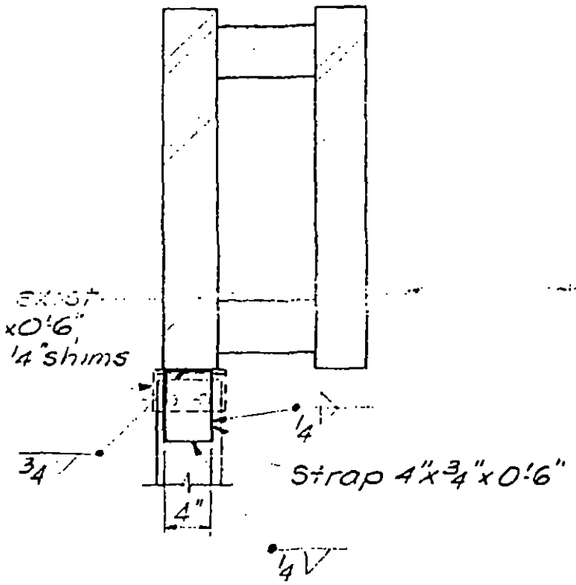

DETAIL 57G

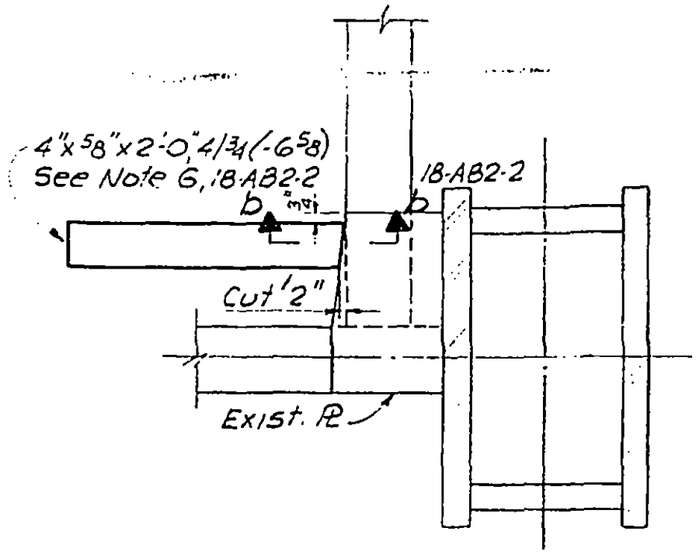

DETAIL 57H

LICENSED PROFESSIONAL ENGINEER
LESLIE E. ROBERTSON
No. 34360
UNIVERSITY OF THE STATE OF NEW YORK

DESIGNED: L. O'Hara
DRAWN: S Wexler
REVIEWED:

18-AB2-57.4

SKILLING, HELLE, CHRISTIANSEN, ROBERTSON — Structural & Civil Engineers

PROJECT THE WORLD TRADE CENTER | TITLE STRAP ANCHORS - CORE - DETAIL 58 | DATE 12-13-68

REVISIONS

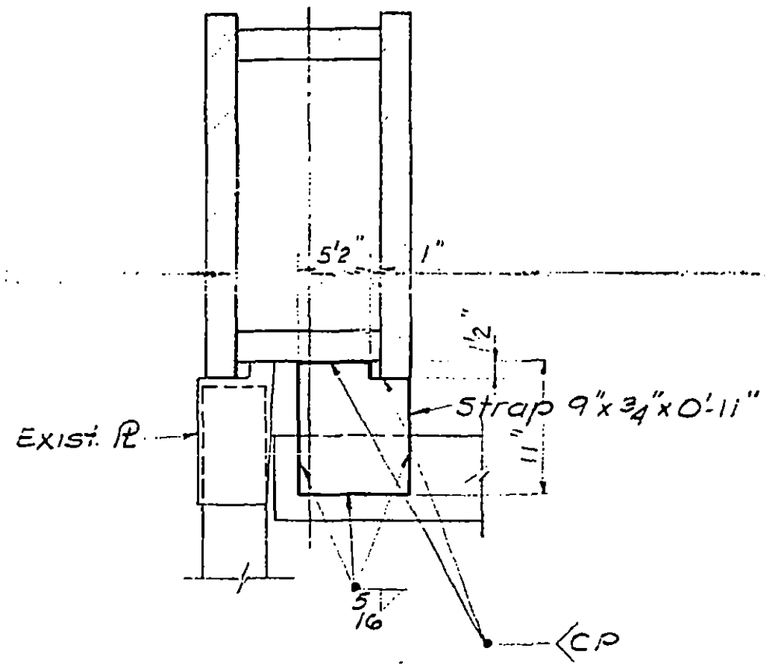

DETAIL 58A

LICENSED PROFESSIONAL ENGINEER
LESLIE E. ROBERTSON
No. 34360
UNIVERSITY OF THE STATE OF NEW YORK

DESIGNED T. O'Neal
DRAWN S. Wexler
REVIEWED

18-AB2-58

SKILLING, HELLE, CHRISTIANSEN, ROBERTSON — Structural & Civil Engineers

PROJECT: THE WORLD TRADE CENTER | TITLE: STRAP ANCHORS - CORE - DETAIL 59 | DATE: 2-7-69

REVISIONS

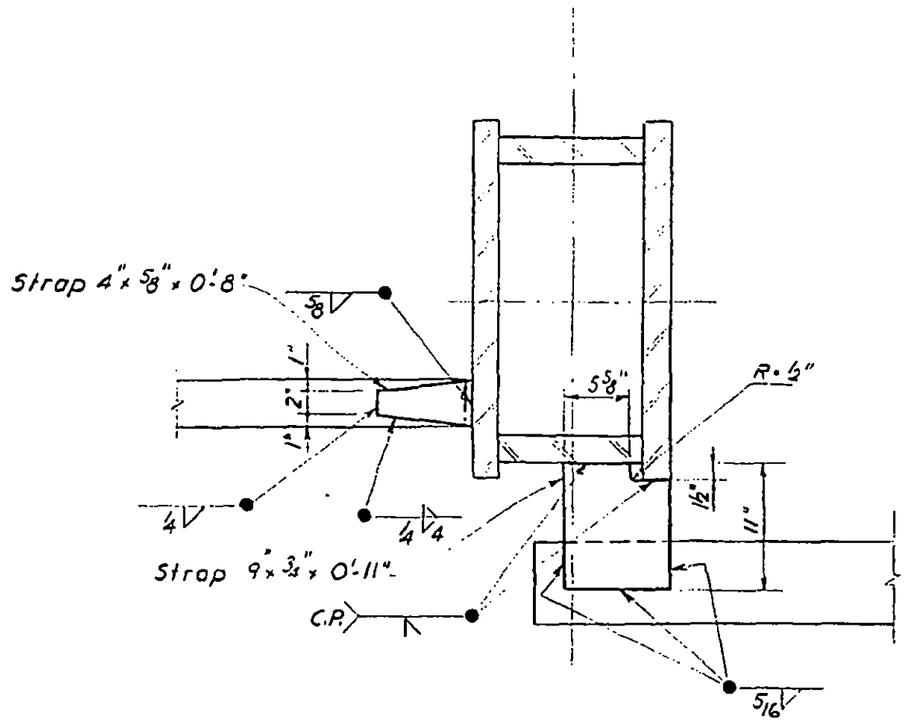

LICENSED PROFESSIONAL ENGINEER
LESLIE E. ROBERTSON
No. 34360
UNIVERSITY OF THE STATE OF NEW YORK

DESIGNED: L. O'Brien Jr.
DRAWN: F. Smith
REVIEWED: W. Brewer

18-AB2-59

SKILLING, HELLE, CHRISTIANSEN, ROBERTSON — Structural & Civil Engineers

PROJECT: THE WORLD TRADE CENTER | TITLE: STRAP ANCHOR - CORE - DETAIL 60 | DATE: 2-7-69

REVISIONS

4-30-69

Detail No	Strap #1 — Studs		Strap #2
60	3" x 3/4" x 2'-1 1/2"	4/5/8	13" x 3/4" x 1'-3"
60A	3" x 3/8" x 1'-7 1/2"	3/5/8	15" x 1/4" x 1'-4"

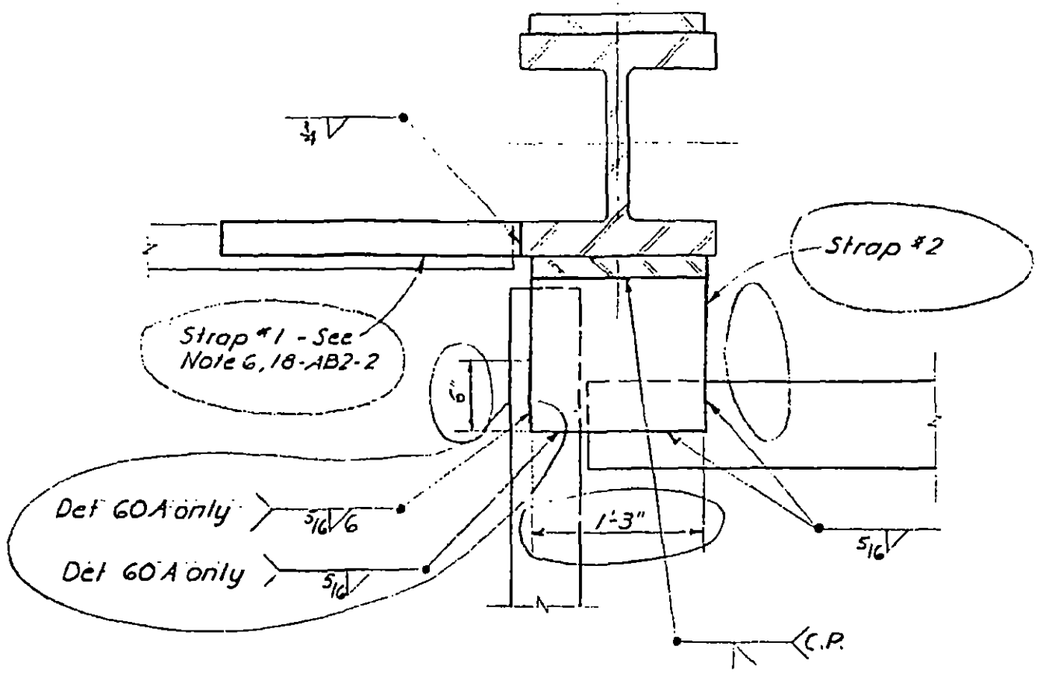

LICENSED PROFESSIONAL ENGINEER
LESLIE E. ROBERTSON
No. 34360
UNIVERSITY OF THE STATE OF NEW YORK

66

DESIGNED: L. E. Robertson

DRAWN: F. Smith

REVIEWED: W. Brewer

18-AB.2-60

SKILLING, HELLE, CHRISTIANSEN, ROBERTSON — Structural & Civil Engineers

PROJECT THE WORLD TRADE CENTER | TITLE STRAP ANCHOR - CORE - DETAIL 61 | DATE 4/30/69

REVISIONS

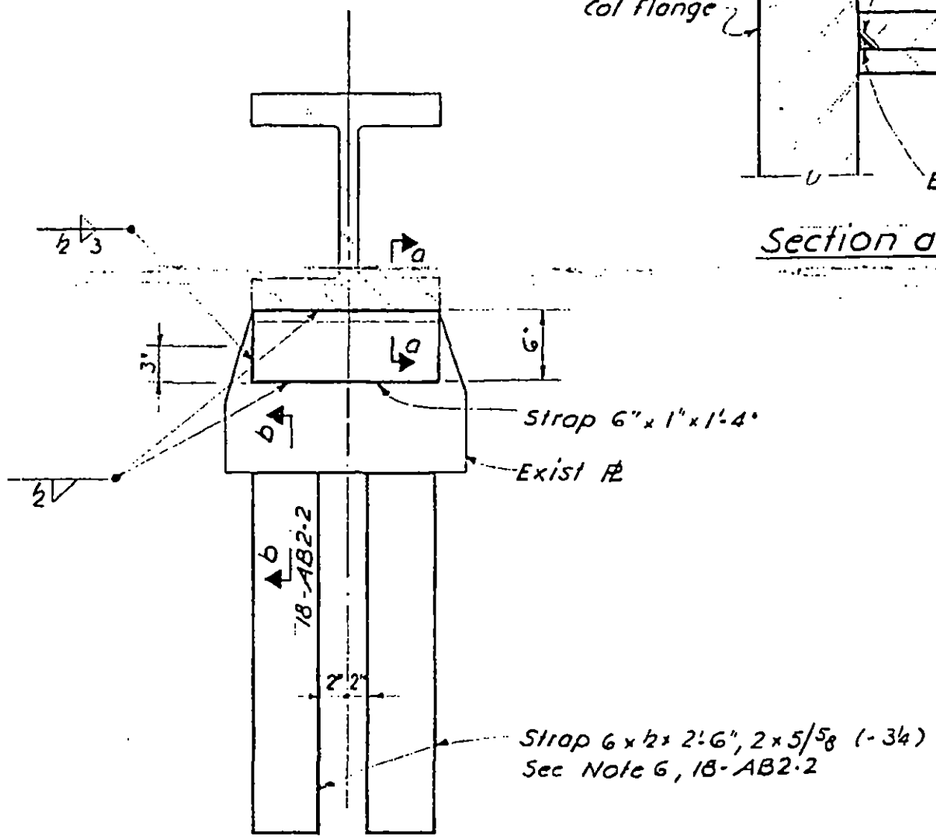

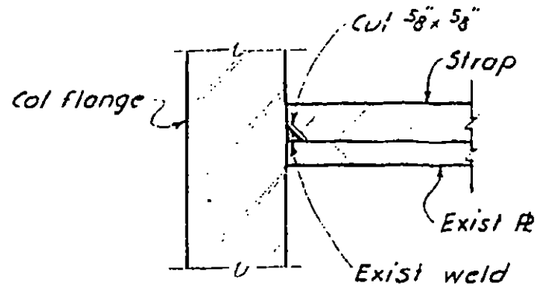

Section a-a

LICENSED PROFESSIONAL ENGINEER
LESLIE E. ROBERTSON
No. 34360
UNIVERSITY OF THE STATE OF NEW YORK

61
DESIGNED

DRAWN
F. Smith

REVIEWED
W. Brewer

18-AB2-61

SKILLING, HELLE, CHRISTIANSEN, ROBERTSON — Structural & Civil Engineers

PROJECT: THE WORLD TRADE CENTER | TITLE: STRAP ANCHORS - CORE - DETAIL 62 | DATE: 4/30/69

REVISIONS

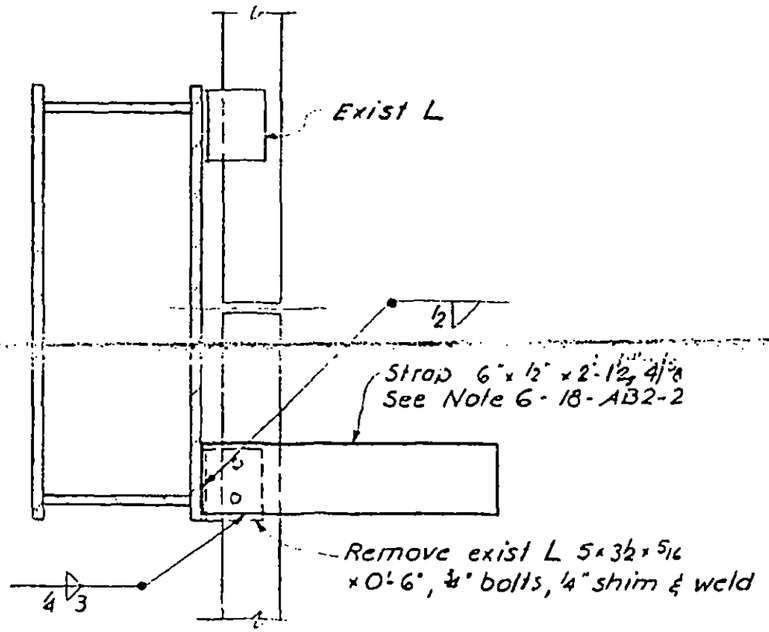

DETAIL 62A

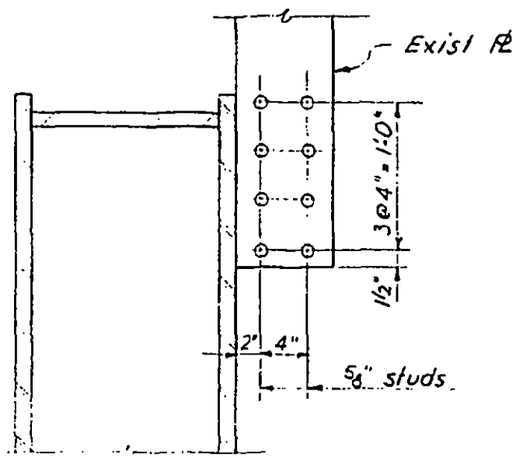

DETAIL 62B

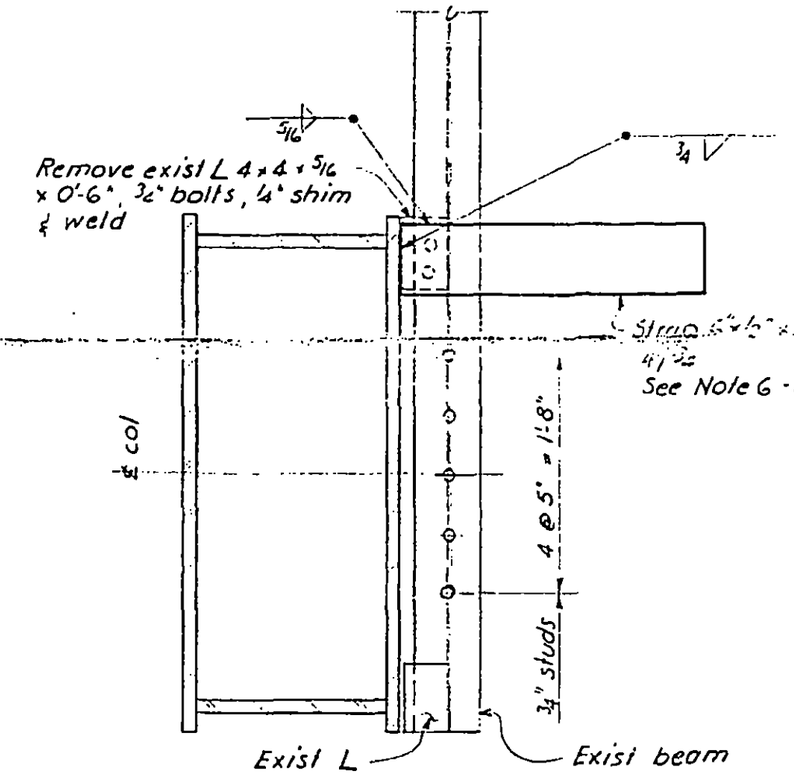

DETAIL 62C

LICENSED PROFESSIONAL ENGINEER — LESLIE E. ROBERTSON — No. 34360 — UNIVERSITY OF THE STATE OF NEW YORK

GJ

DRAWN F. Smith

REVIEWED W. Brewer

18-AB2-62.1

SKILLING, HELLE, CHRISTIANSEN, ROBERTSON — Structural & Civil Engineers

PROJECT: THE WORLD TRADE CENTER | TITLE: STRAP ANCHORS - DETAIL 62 | DATE: 4/30/69

REVISIONS

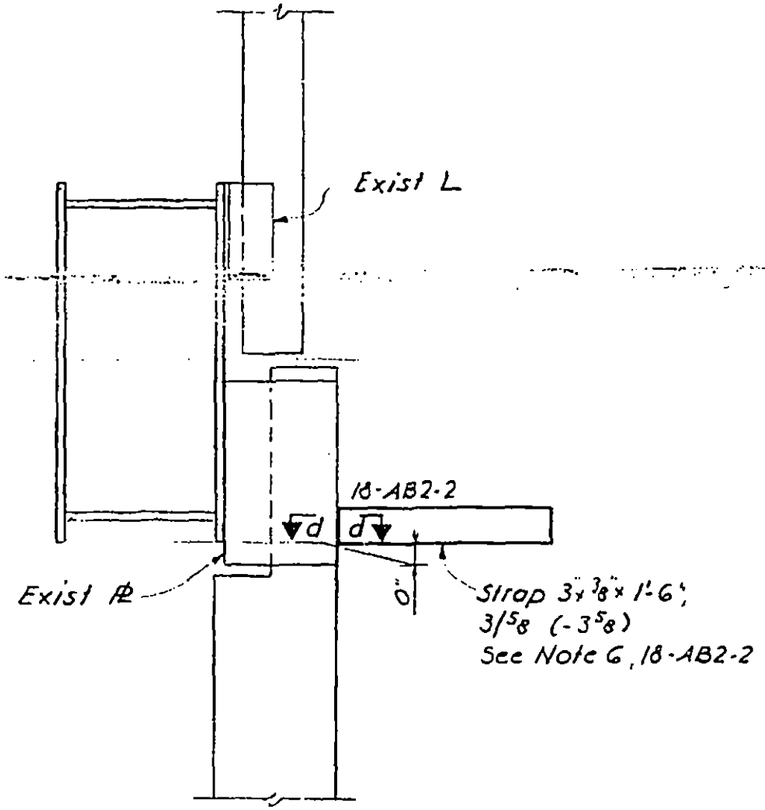

DETAIL 62D

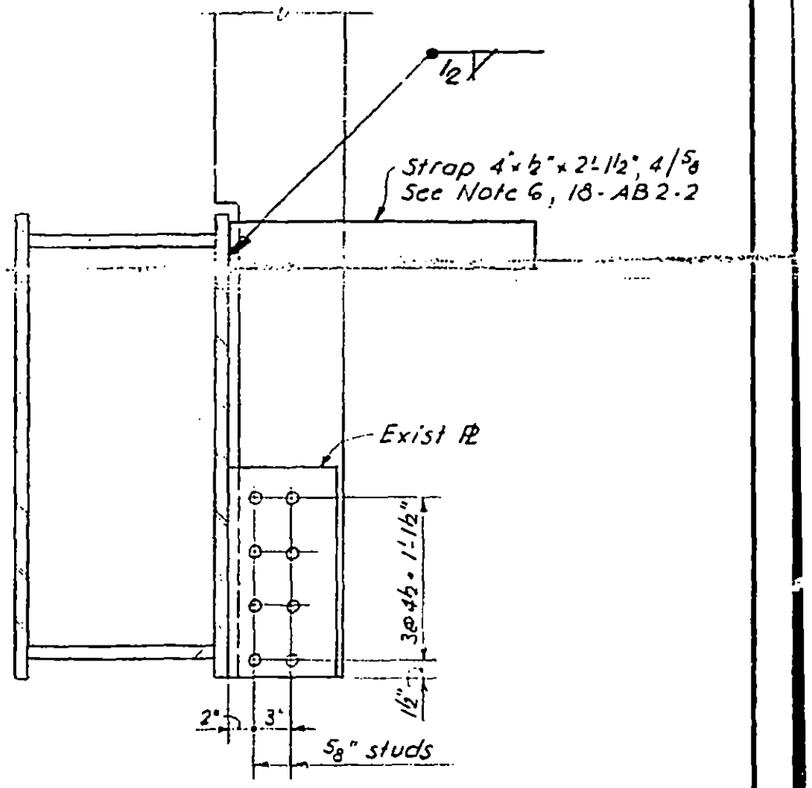

DETAIL 62E

LICENSED PROFESSIONAL ENGINEER
LESLIE E. ROBERTSON
No. 34960
UNIVERSITY OF THE STATE OF NEW YORK

69
DESIGNED

DRAWN
F. Smith

REVIEWED
W. Brewer

18-AB2-62.2

SKILLING, HELLE, CHRISTIANSEN, ROBERTSON — Structural & Civil Engineers

PROJECT THE WORLD TRADE CENTER | TITLE STRAP ANCHOR - CORE - DETAIL 63 | DATE 4/30/69

REVISIONS

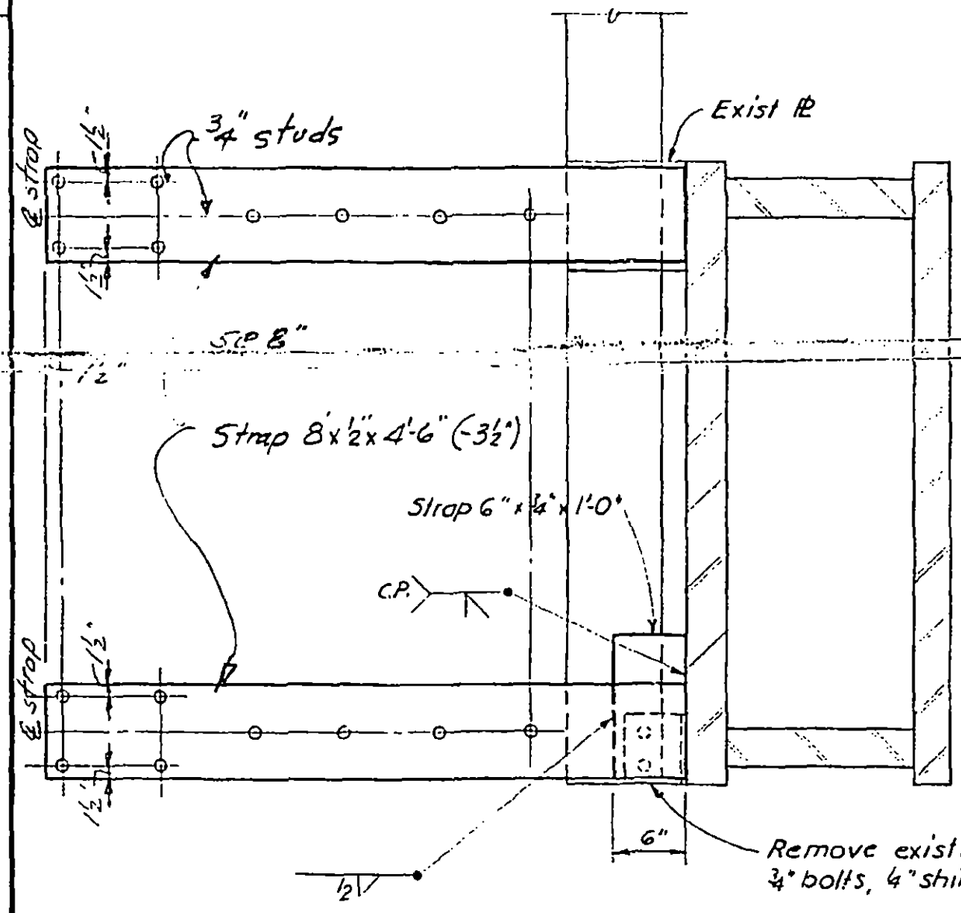

DETAIL 63A

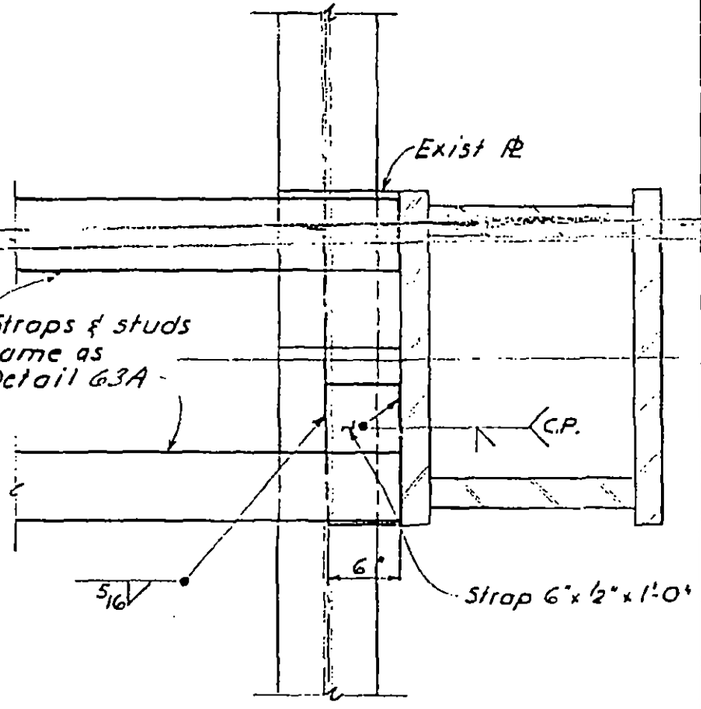

DETAIL 63B

LICENSED PROFESSIONAL ENGINEER
LESLIE E. ROBERTSON
No 34360
UNIVERSITY OF THE STATE OF NEW YORK

70 DESIGNED

DRAWN F. Smith

REVIEWED W. Brewer

18-AB2-63

SKILLING, HELLE, CHRISTIANSEN, ROBERTSON — Structural & Civil Engineers

PROJECT THE WORLD TRADE CENTER | TITLE STRAP ANCHOR - CORE - DETAIL 64 | DATE 4/30/69

REVISIONS

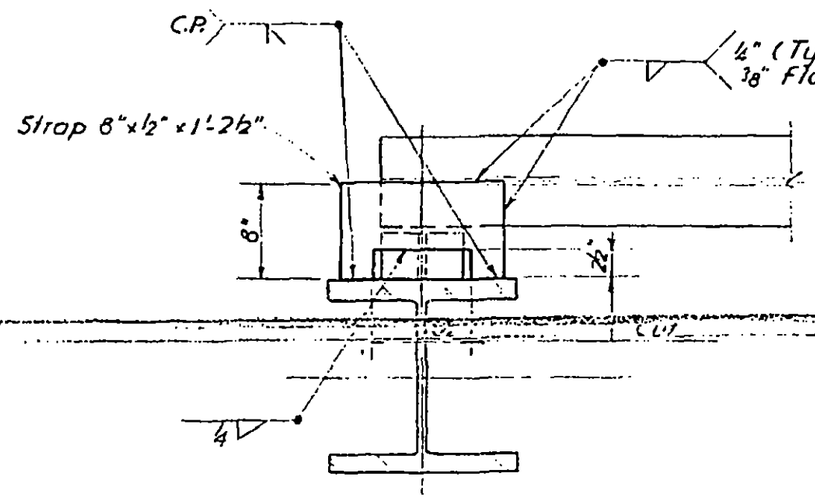

DETAIL 64A

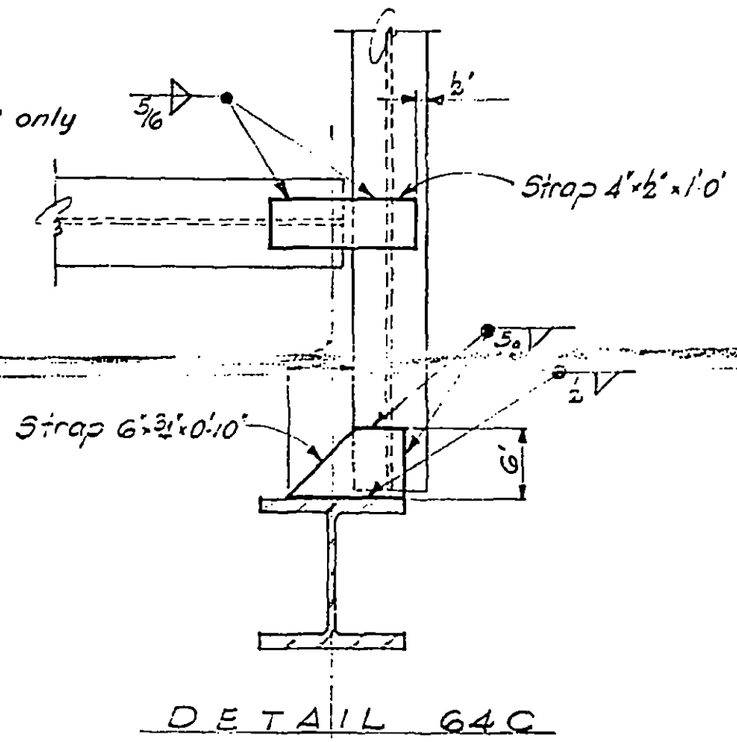

DETAIL 64C

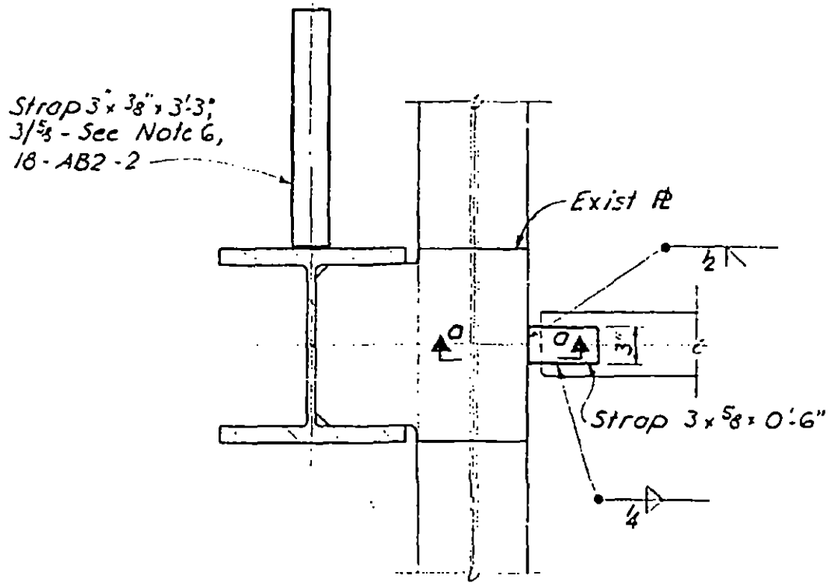

DETAIL 64B

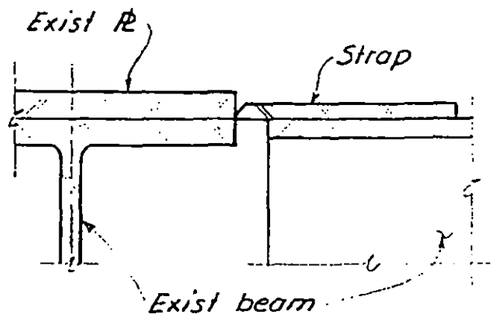

Section a-a

LICENSED PROFESSIONAL ENGINEER
LESLIE E. ROBERTSON
No. 34360
UNIVERSITY OF THE STATE OF NEW YORK

71
DESIGNED

DRAWN
F. Smith

REVIEWED
W. Brewer

18-AB2-64.1

SKILLING, HELLE, CHRISTIANSEN, ROBERTSON — Structural & Civil Engineers

PROJECT THE WORLD TRADE CENTER | TITLE STRAP ANCHOR CORE DETAIL 64 | DATE 4/30/69

REVISIONS

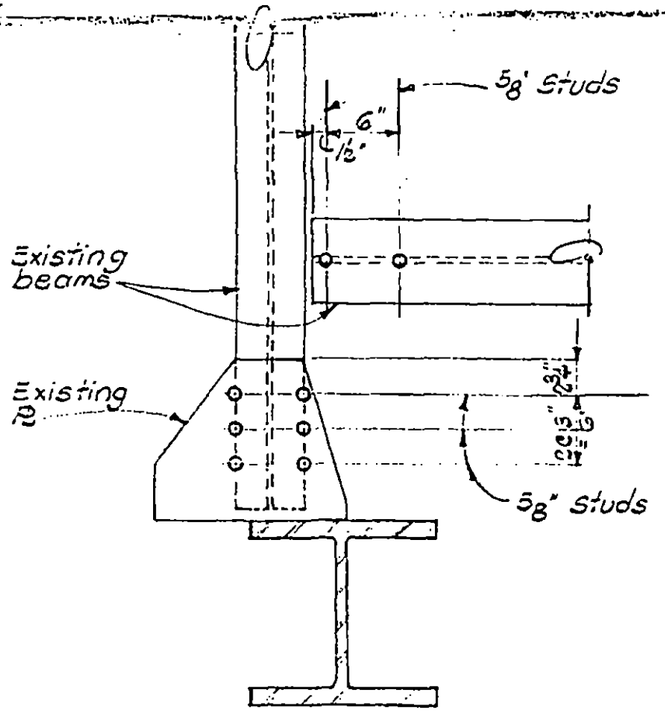

SECTION 64D

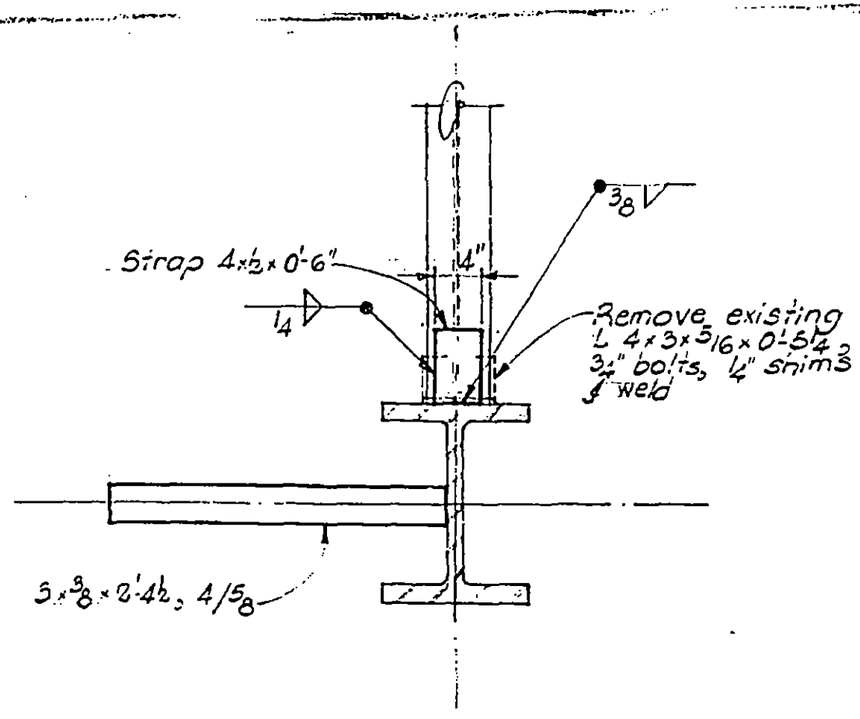

SECTION 64E

LICENSED PROFESSIONAL ENGINEER
LESLIE E. ROBERTSON
No. 34360
UNIVERSITY OF THE STATE OF NEW YORK

22
DESIGNED

DRAWN
S.T.M.

REVIEWED
W. Brewer

18-A62-64.2

SKILLING, HELLE, CHRISTIANSEN, ROBERTSON — Structural & Civil Engineers

PROJECT THE WORLD TRADE CENTER | TITLE STRAP ANCHOR CORE DETAIL 65 | DATE 4-30-69

REVISIONS

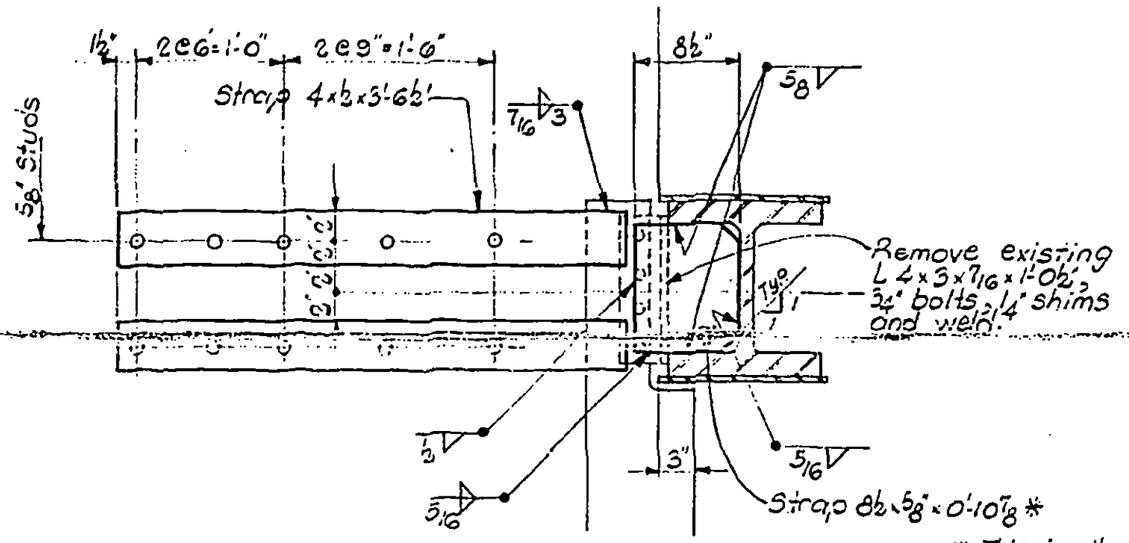

DETAIL 65A

* This is the theoretical dimension. Cut in the field from 8½"x5/8"x1'-0" Maximum gap permitted between strap and column flange is 3/16"

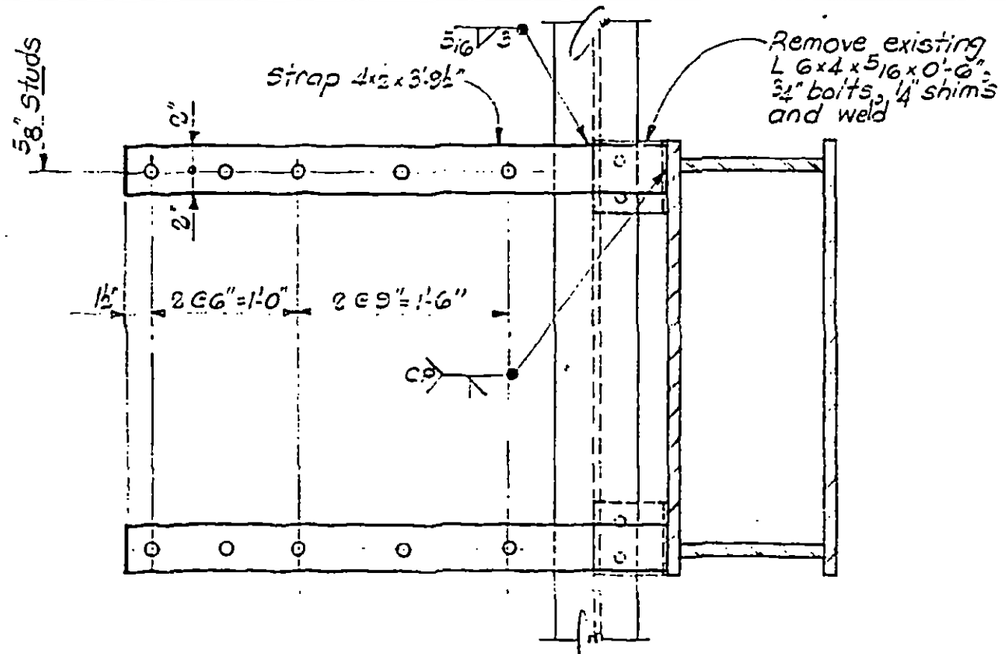

DETAIL 65B

LICENSED PROFESSIONAL ENGINEER — LESLIE E. ROBERTSON — No. 34360 — UNIVERSITY OF THE STATE OF NEW YORK

73

DESIGNED

DRAWN S.T.M.

REVIEWED W. Brewer

18-A32-65

SKILLING, HELLE, CHRISTIANSEN, ROBERTSON — Structural & Civil Engineers

PROJECT THE WORLD TRADE CENTER | TITLE STRAP ANCHOR CORE DETAIL 66 | DATE 4-30-69

REVISIONS

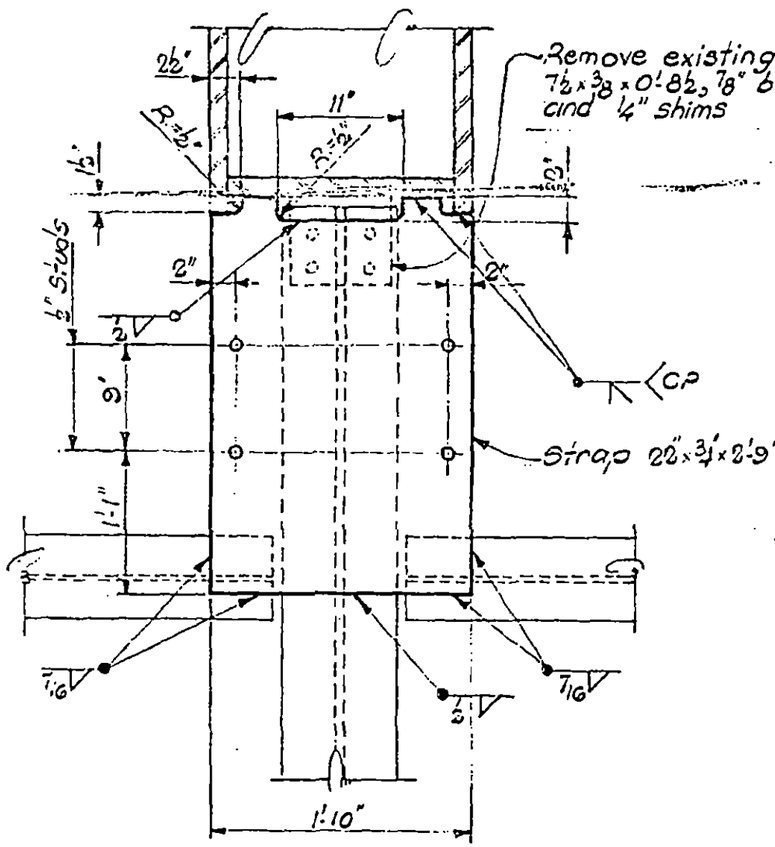

DETAIL 66A

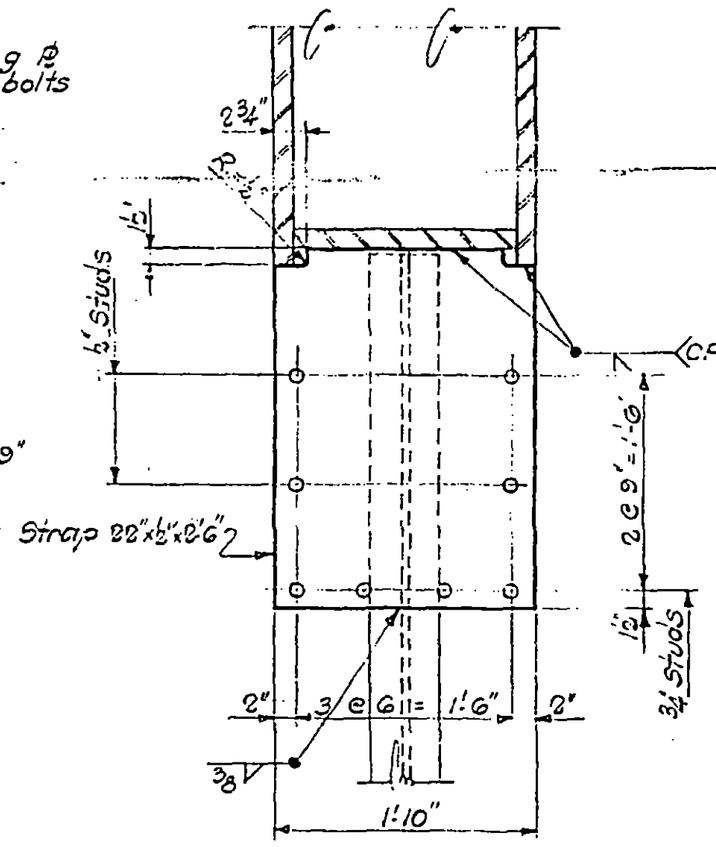

DETAIL 66B

DESIGNED

DRAWN S.T.M.

REVIEWED W Brewer

18-432-66.1

SKILLING, HELLE, CHRISTIANSEN, ROBERTSON — Structural & Civil Engineers

PROJECT THE WORLD TRADE CENTER | TITLE STRAP ANCHOR CORE DETAIL 66 | DATE 4-30-69

REVISIONS

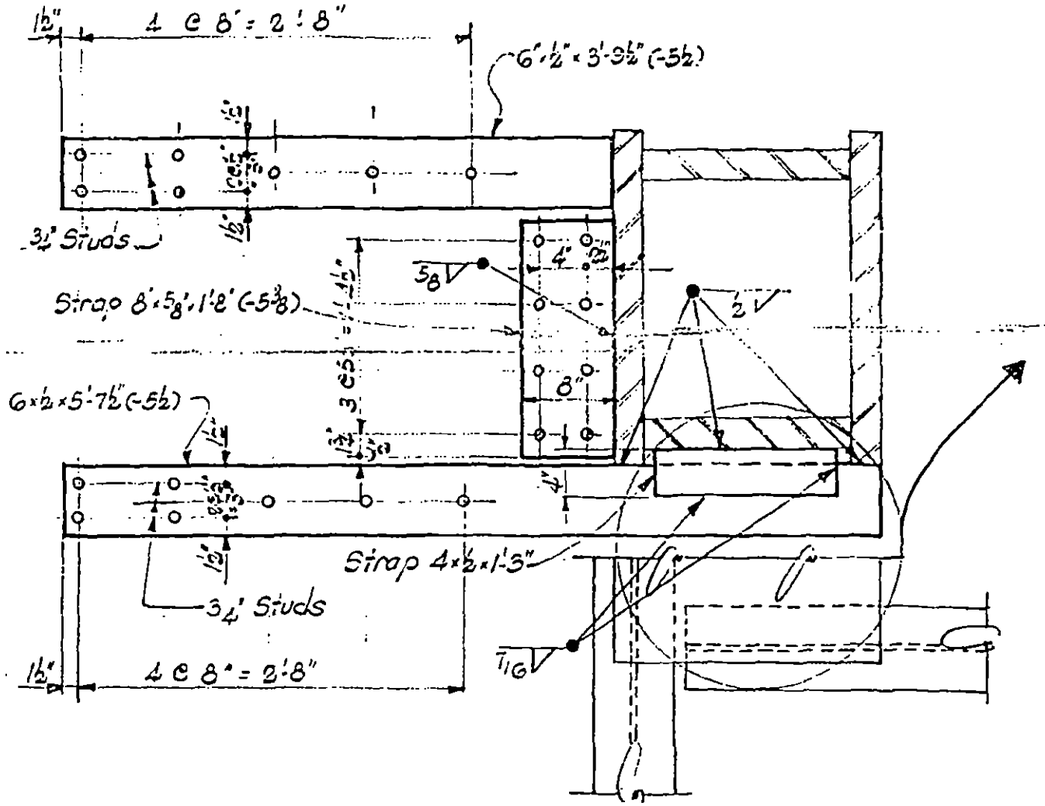

DETAIL 66C

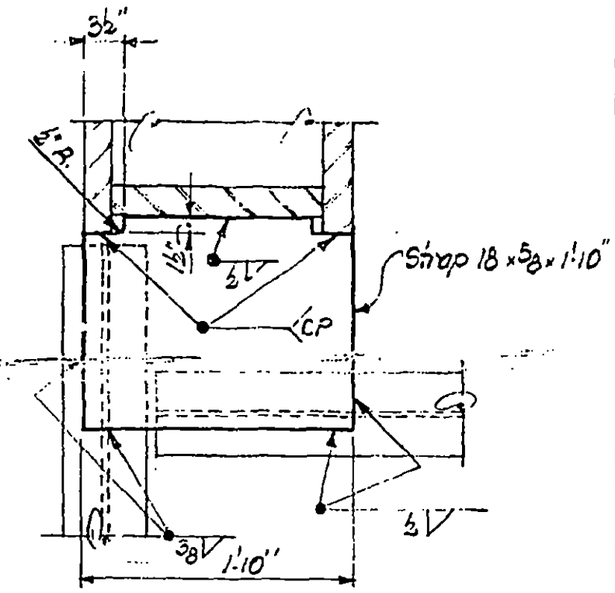

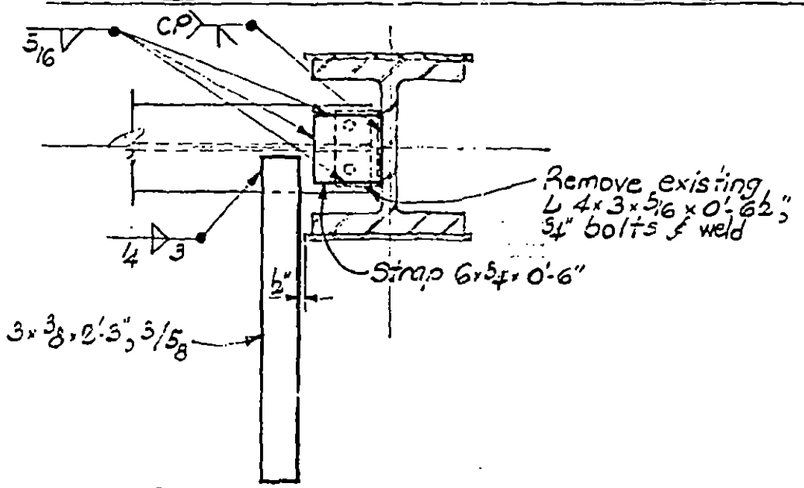

DETAIL 66D

LICENSED PROFESSIONAL ENGINEER
LESLIE E. ROBERTSON
No. 34360
UNIVERSITY OF THE STATE OF NEW YORK

DESIGNED

DRAWN S.T.M.

REVISED W Brewer

18-AB2-66.2

SKILLING, HELLE, CHRISTIANSEN, ROBERTSON — Structural & Civil Engineers

PROJECT: THE WORLD TRADE CENTER | TITLE: STRAP ANCHOR - CORE - DETAIL 66 | DATE: 4/30/69

REVISIONS

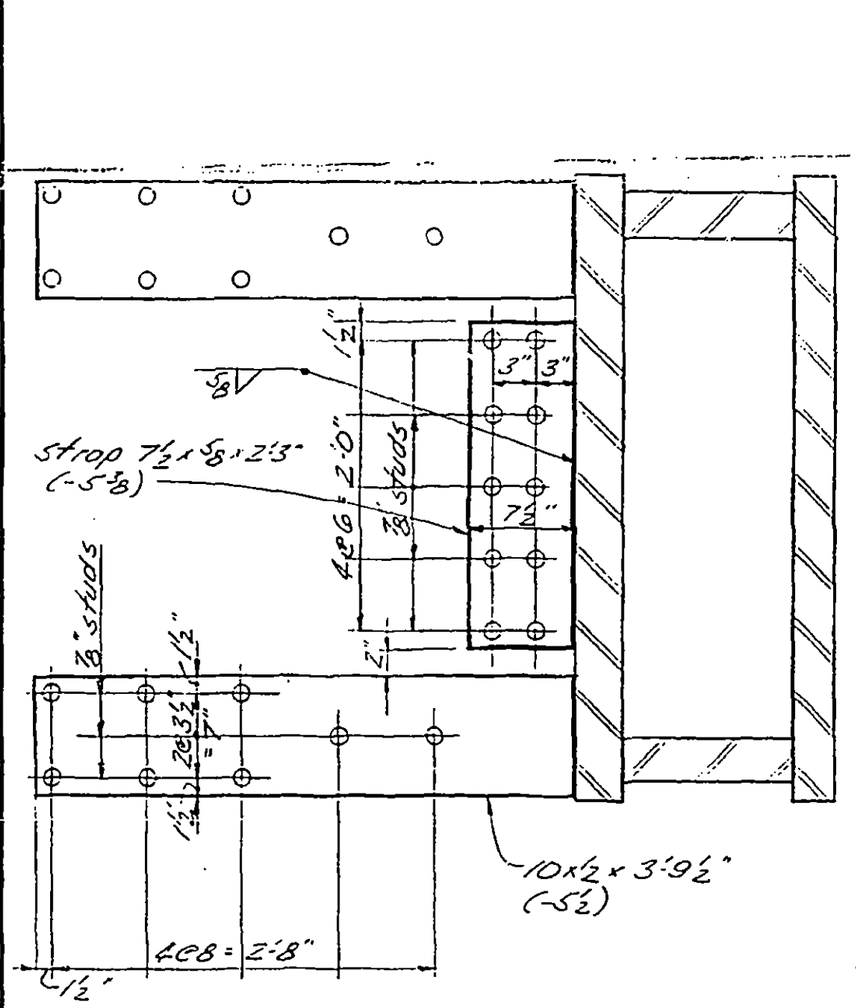

DETAIL 66E

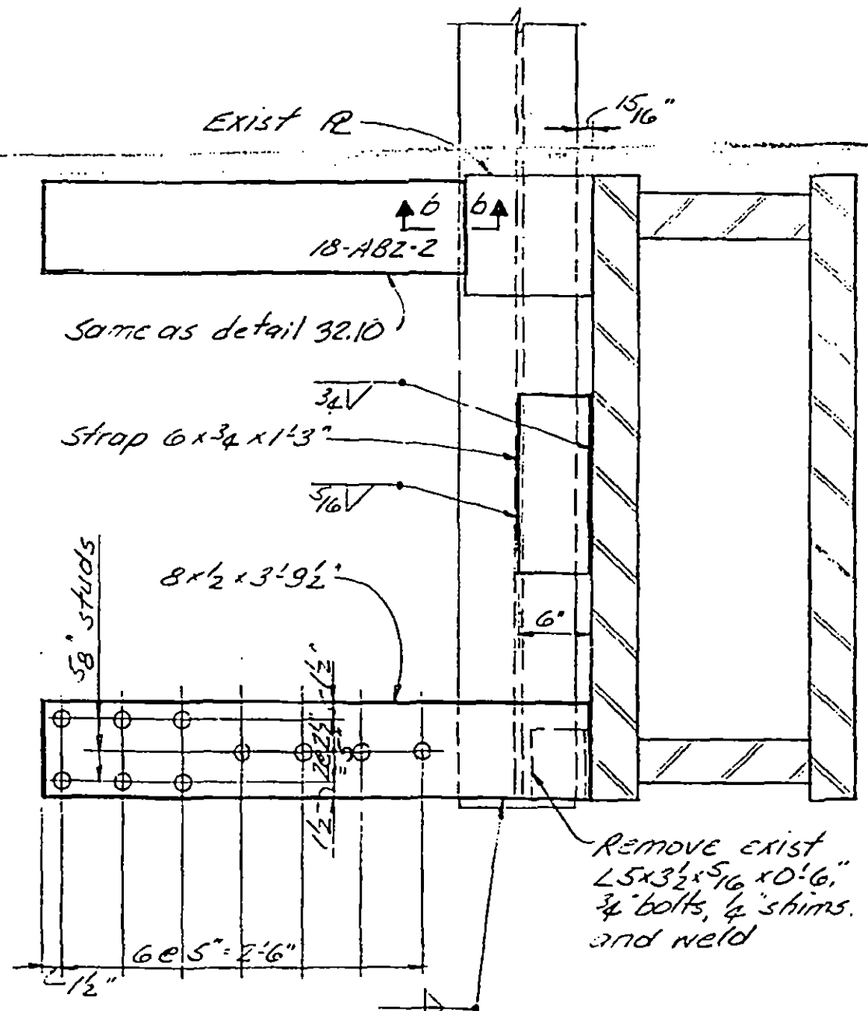

DETAIL 66F

LICENSED PROFESSIONAL ENGINEER — LESLIE E. ROBERTSON — No. 34360 — UNIVERSITY OF THE STATE OF NEW YORK

DESIGNED

DRAWN J. Adams

REVIEWED W. Brewer

18-A82-66.3

SKILLING, HELLE, CHRISTIANSEN, ROBERTSON — Structural & Civil Engineers

PROJECT THE WORLD TRADE CENTER | TITLE STRAP ANCHORS - CORE - DETAIL 67 | DATE 4/30/69

REVISIONS

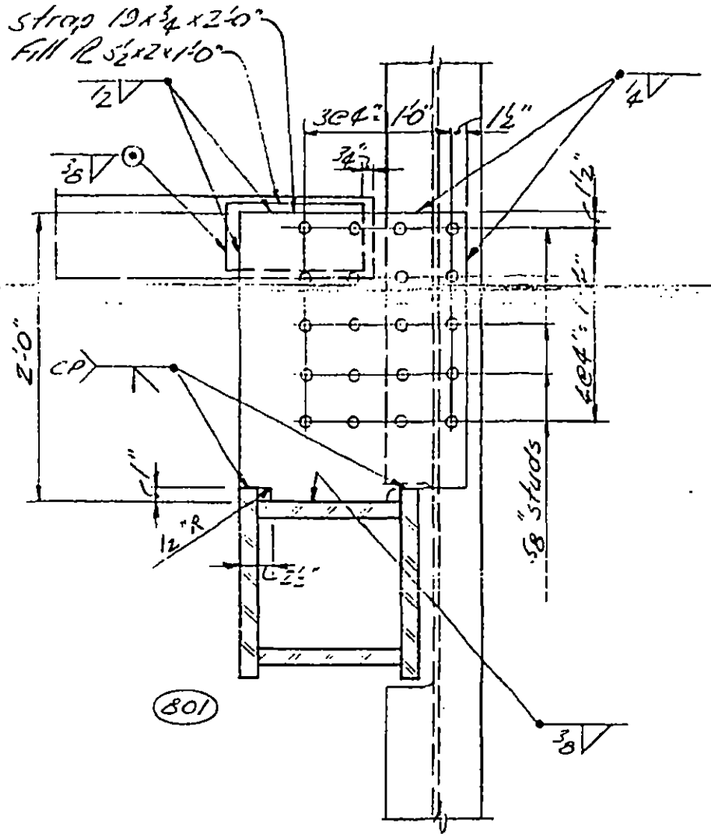

DETAIL 67A

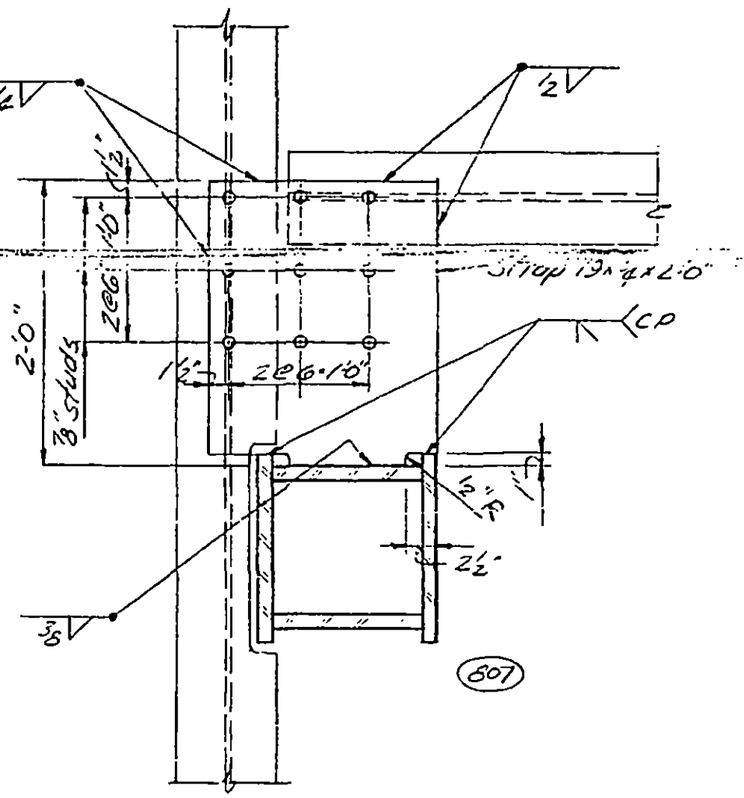

DETAIL 67B

LICENSED PROFESSIONAL ENGINEER
LESLIE E. ROBERTSON
No. 34360
UNIVERSITY OF THE STATE OF NEW YORK

DRAWN J. Adams

REVIEWED W. Brewer

18-ABZ-67.1

SKILLING, HELLE, CHRISTIANSEN, ROBERTSON — Structural & Civil Engineers

PROJECT THE WORLD TRADE CENTER | TITLE STRAP ANCHOR - CORE - DETAIL 67 | DATE 4/30/69

REVISIONS

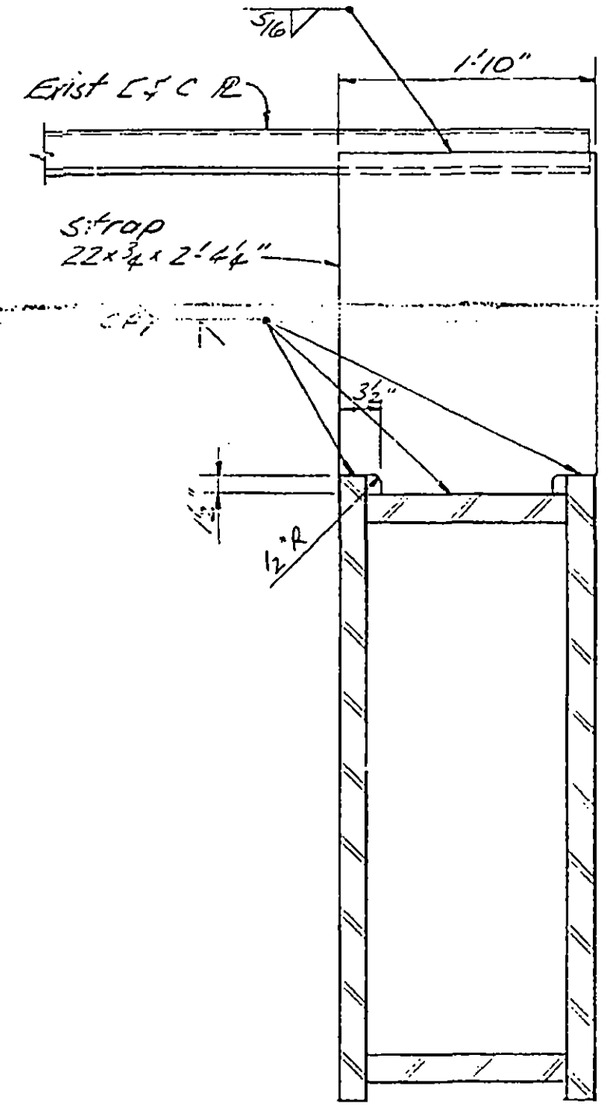

DETAIL 67C

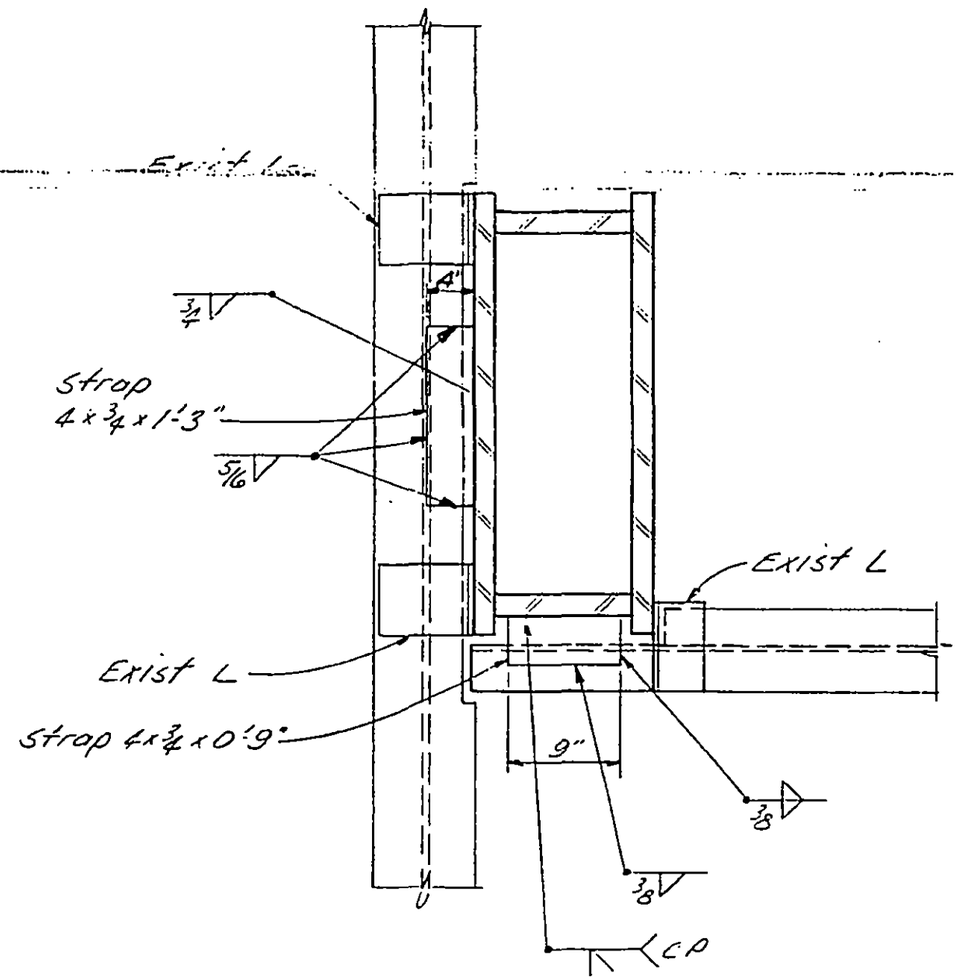

DETAIL 67D

LICENSED PROFESSIONAL ENGINEER — LESLIE E. ROBERTSON — No. 34360 — UNIVERSITY OF THE STATE OF NEW YORK

DRAWN J. Adams

REVIEWED W. Brewer

18-A82-67.2

SKILLING, HELLE, CHRISTIANSEN, ROBERTSON — Structural & Civil Engineers

PROJECT THE WORLD TRADE CENTER | TITLE STRAP ANCHOR CORE DETAIL 68 | DATE 4/30/69

REVISIONS

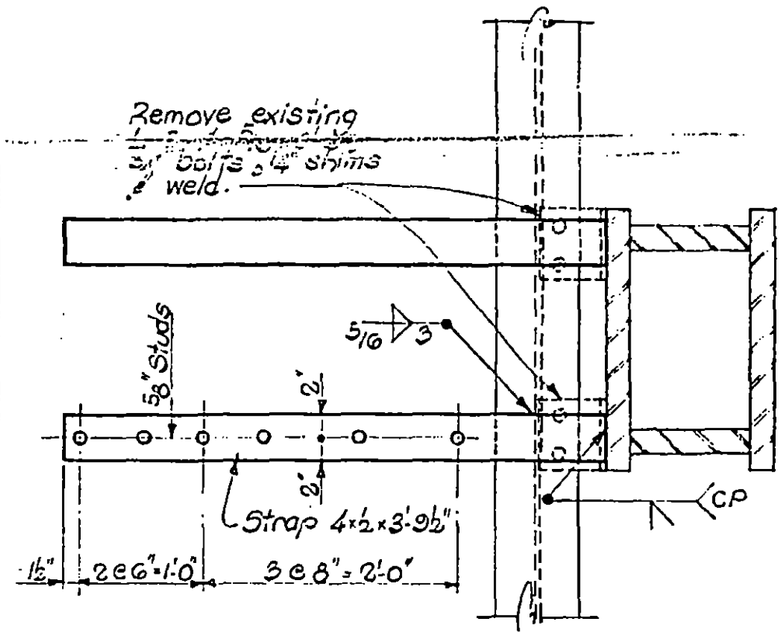

DETAIL 68A

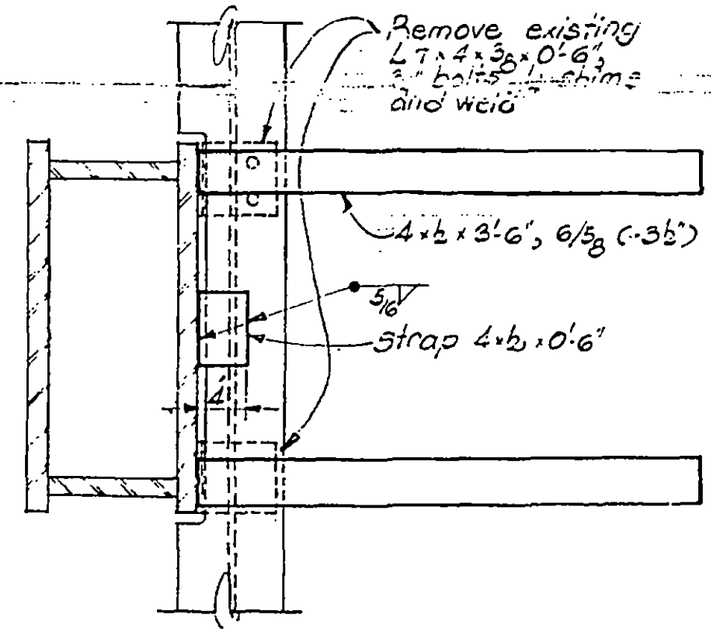

DETAIL 68B

LICENSED PROFESSIONAL ENGINEER
LESLIE E. ROBERTSON
No. 34360
UNIVERSITY OF THE STATE OF NEW YORK

DESIGNED

DRAWN S.T.M.

REVIEWED W. Brewer

18-A82-68

SKILLING, HELLE, CHRISTIANSEN, ROBERTSON — Structural & Civil Engineers

PROJECT: THE WORLD TRADE CENTER | TITLE: STRAP ANCHORS - CORE - DETAIL 69 | DATE: 5-20-69

REVISIONS

10/1/69

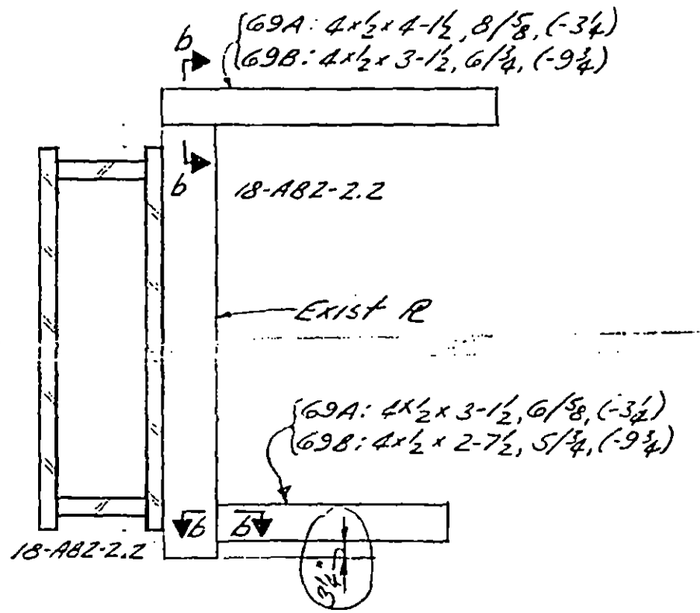

69A & B

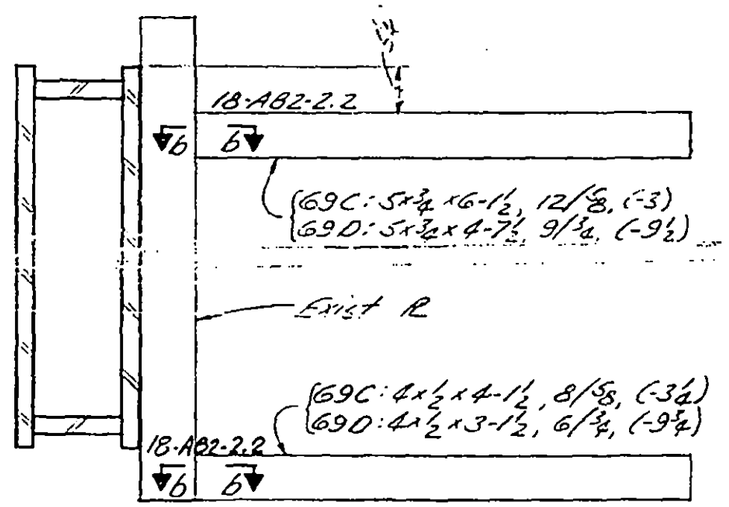

69C & D

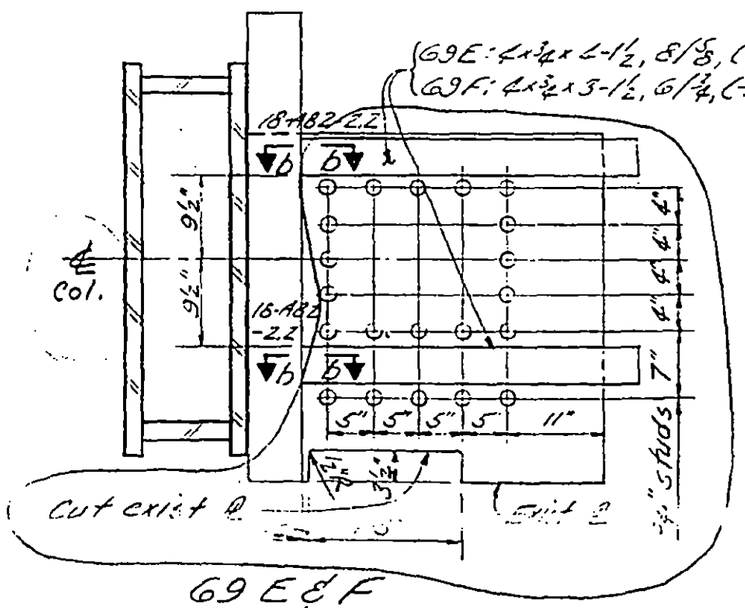

69 E & F

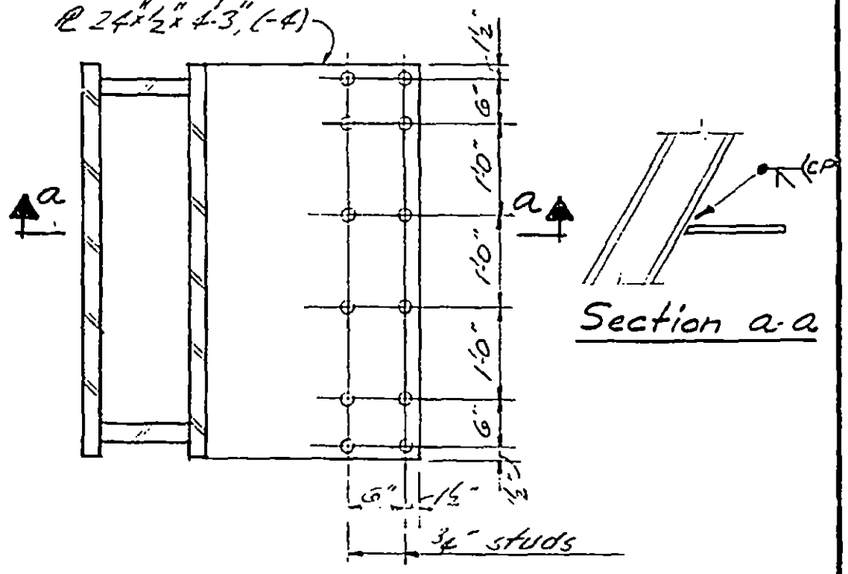

69G

Section a-a

LICENSED PROFESSIONAL ENGINEER
LESLIE E. ROBERTSON
No. 34360
UNIVERSITY OF THE STATE OF NEW YORK

DESIGNED

DRAWN
J. Adams

REVIEWED
C.W. Brewer

18-A82-69.1

SKILLING, HELLE, CHRISTIANSEN, ROBERTSON — Structural & Civil Engineers

PROJECT: THE WORLD TRADE CENTER | TITLE: STRAP ANCHORS - CORE - DETAIL 69 | DATE: 10-1-69

REVISIONS

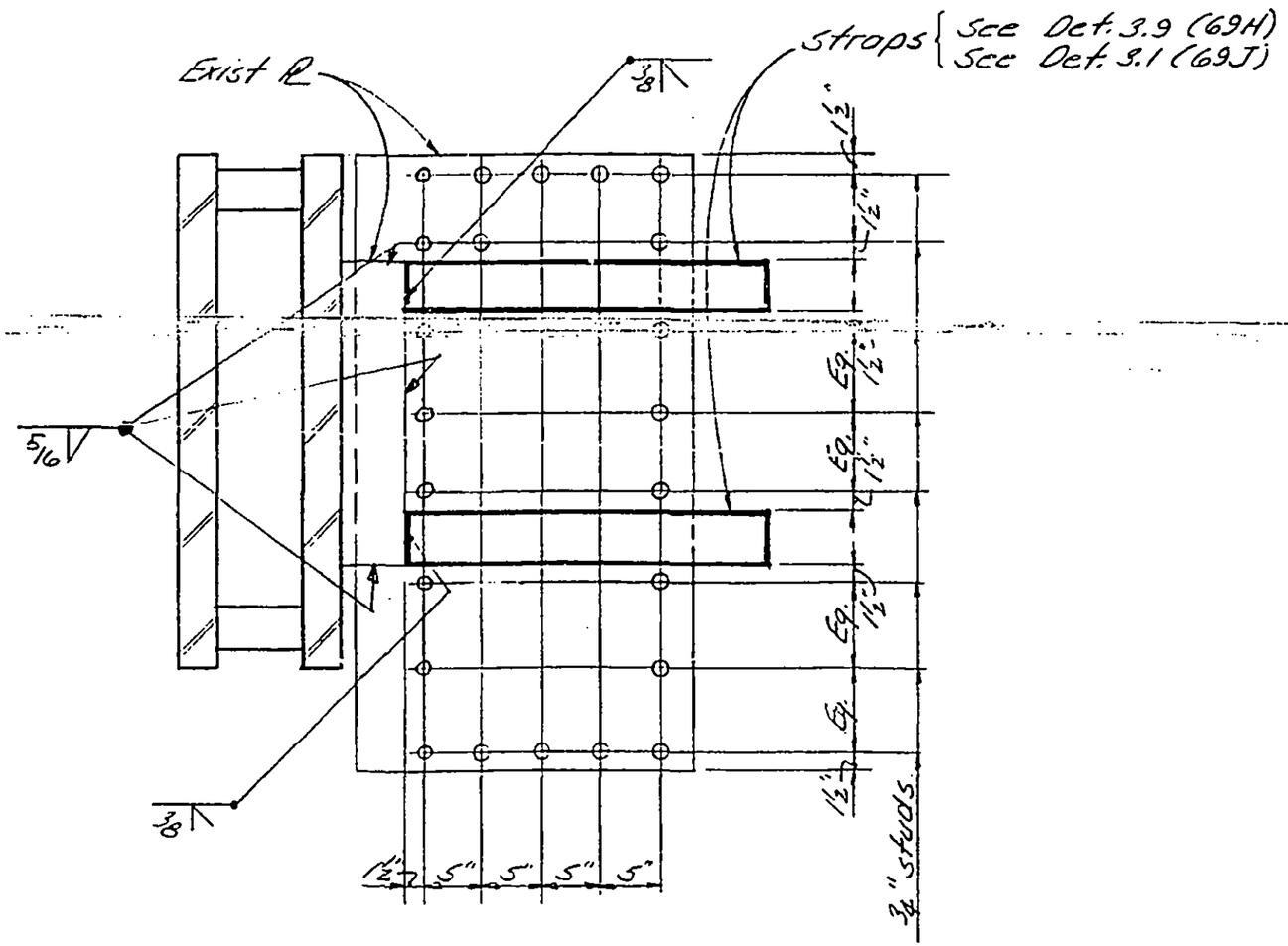

Details 69H & 69J

LICENSED PROFESSIONAL ENGINEER LESLIE E. ROBERTSON No 34386 UNIVERSITY OF THE STATE OF NEW YORK

DESIGNED

DRAWN J. Adams

REVIEWED

18-A82-69.2

SKILLING, HELLE, CHRISTIANSEN, ROBERTSON — Structural & Civil Engineers

PROJECT	TITLE	DATE
THE WORLD TRADE CENTER	STRAP ANCHOR - CORE - DETAIL 70	5-20-69

REVISIONS

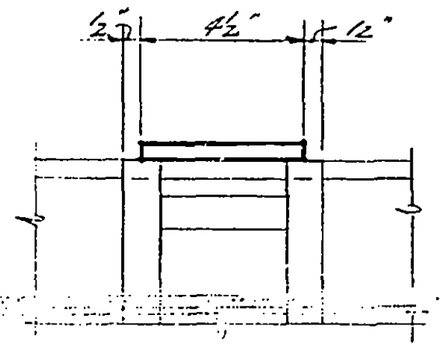

Section a-a

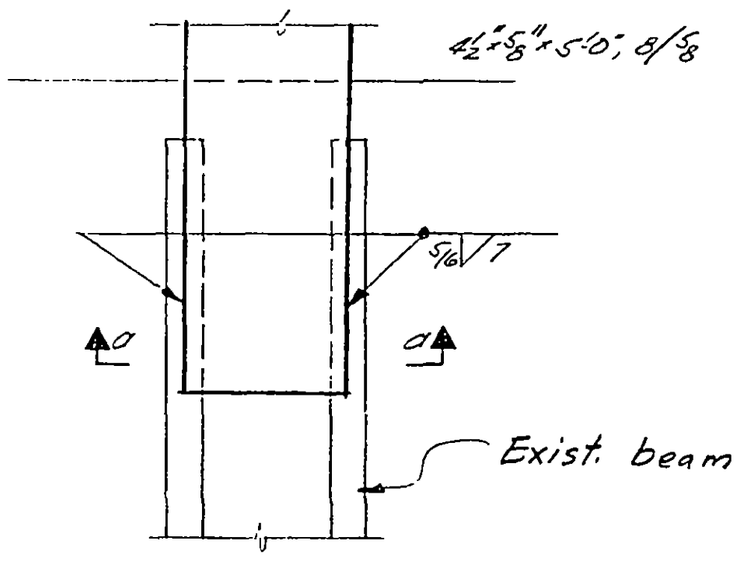

LICENSED PROFESSIONAL ENGINEER
LESLIE E. ROBERTSON
No. 34360
UNIVERSITY OF THE STATE OF NEW YORK

DESIGNED

DRAWN
J. Adams

REVIEWED
W. Brewer

18-AB2-70

SKILLING, HELLE, CHRISTIANSEN, ROBERTSON — Structural & Civil Engineers

PROJECT: THE WORLD TRADE CENTER | TITLE: STRAP ANCHORS - CORE - DETAIL 71 | DATE: 5-20-69

REVISIONS

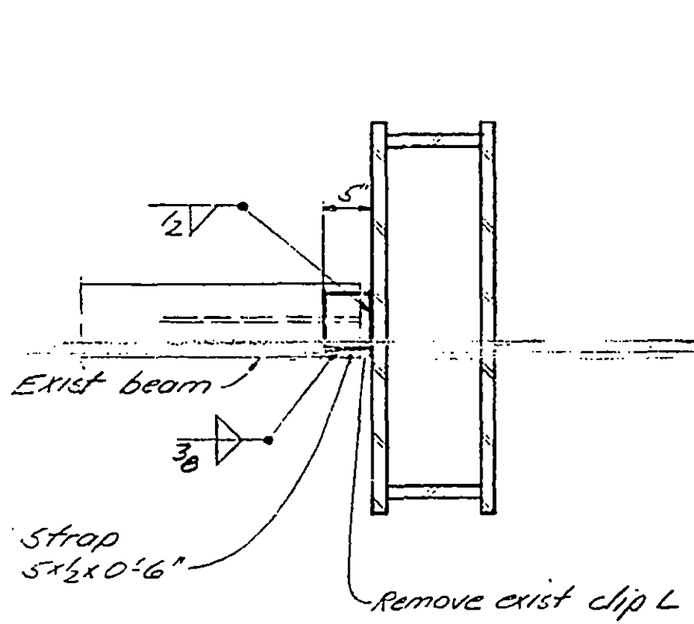

71A

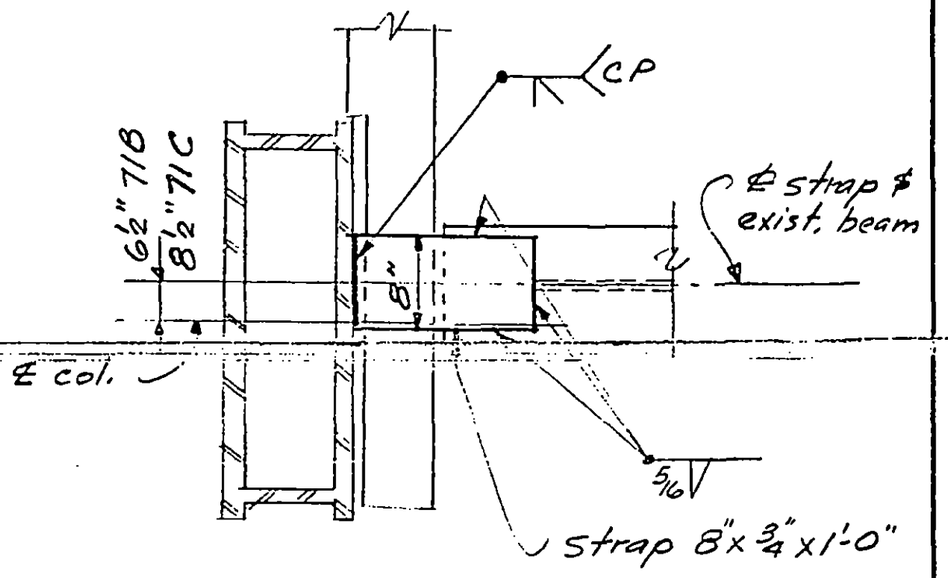

71B & C

LICENSED PROFESSIONAL ENGINEER
LESLIE E. ROBERTSON
No 34360
UNIVERSITY OF THE STATE OF NEW YORK

DESIGNED

DRAWN
J. Adams

REVIEWED
W. Brewer

18-A82-71

SKILLING, HELLE, CHRISTIANSEN, ROBERTSON — Structural & Civil Engineers

PROJECT: THE WORLD TRADE CENTER | TITLE: STRAP ANCHOR - CORE - DETAIL 72 | DATE: 5-20-69

REVISIONS

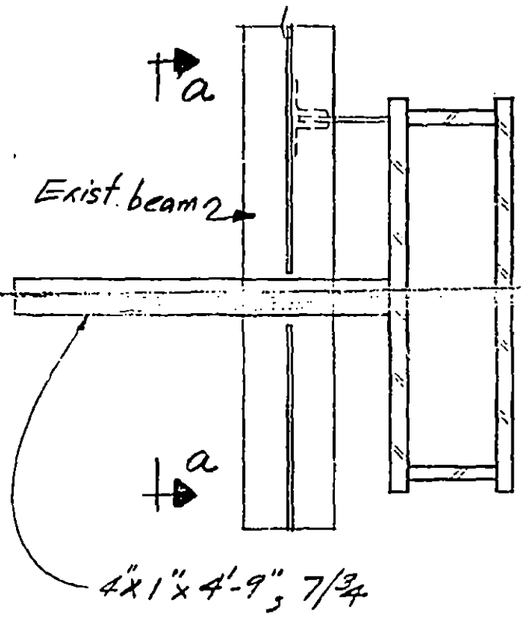

72 A

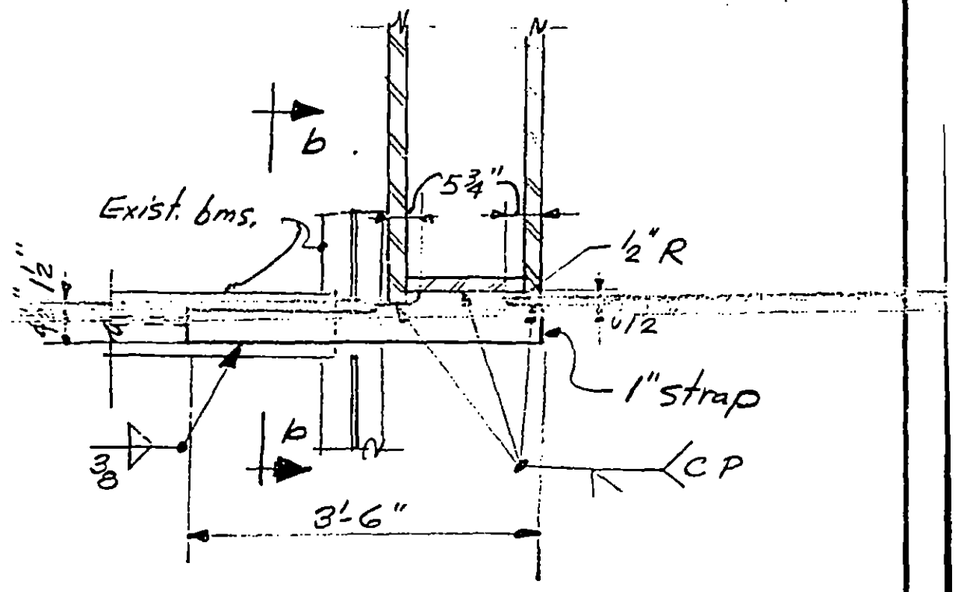

72 B

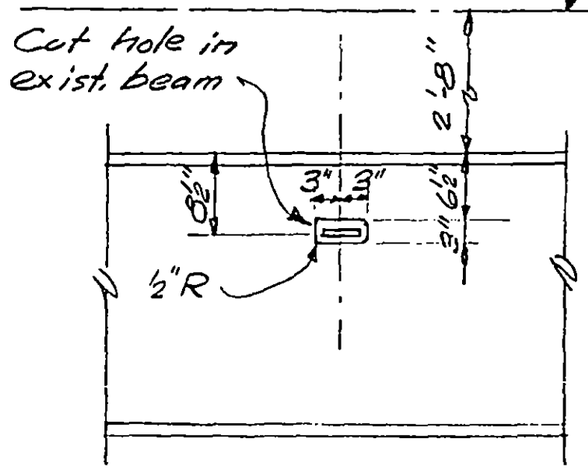

Section a-a

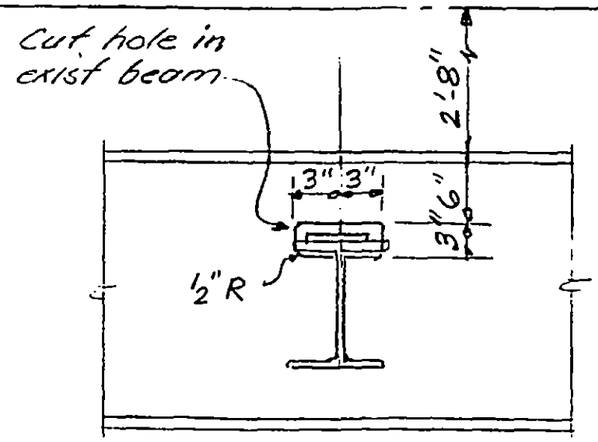

Section b-b

LICENSED PROFESSIONAL ENGINEER — LESLIE E. ROBERTSON — No. 34360 — UNIVERSITY OF THE STATE OF NEW YORK

DESIGNED

DRAWN: J. Adams

REVIEWED: W. Brewer

18-A82-72

SKILLING, HELLE, CHRISTIANSEN, ROBERTSON — Structural & Civil Engineers

PROJECT THE WORLD TRADE CENTER | TITLE STRAP ANCHORS - CORE - DETAIL 73 | DATE 5-28-69

REVISIONS

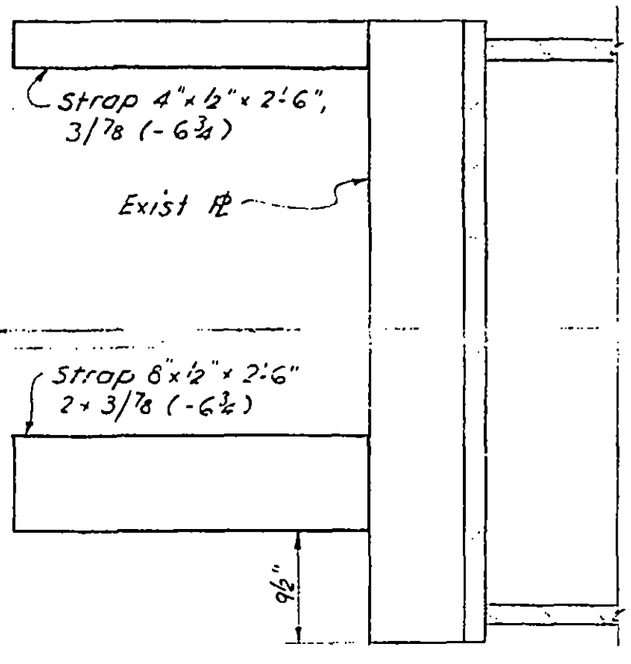

DETAIL 73 A

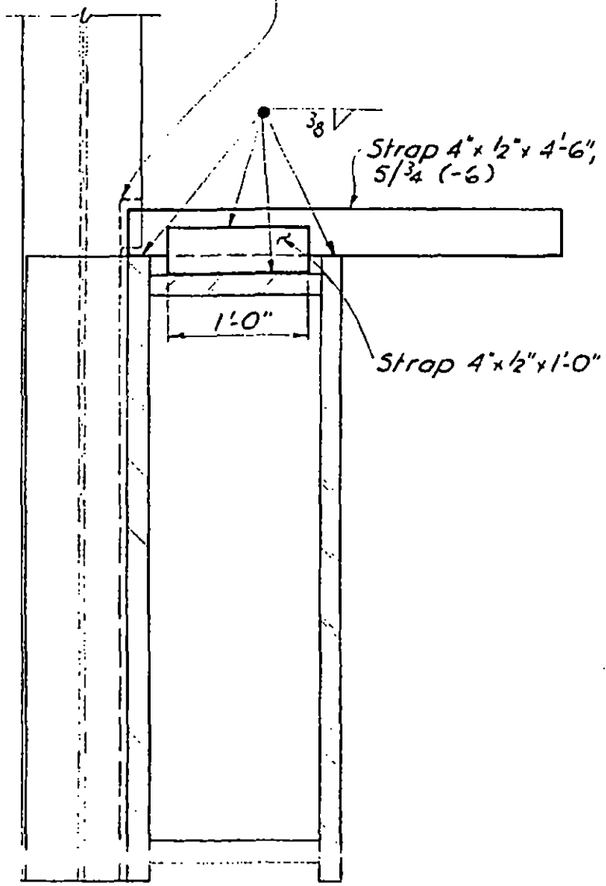

DETAIL 73 B

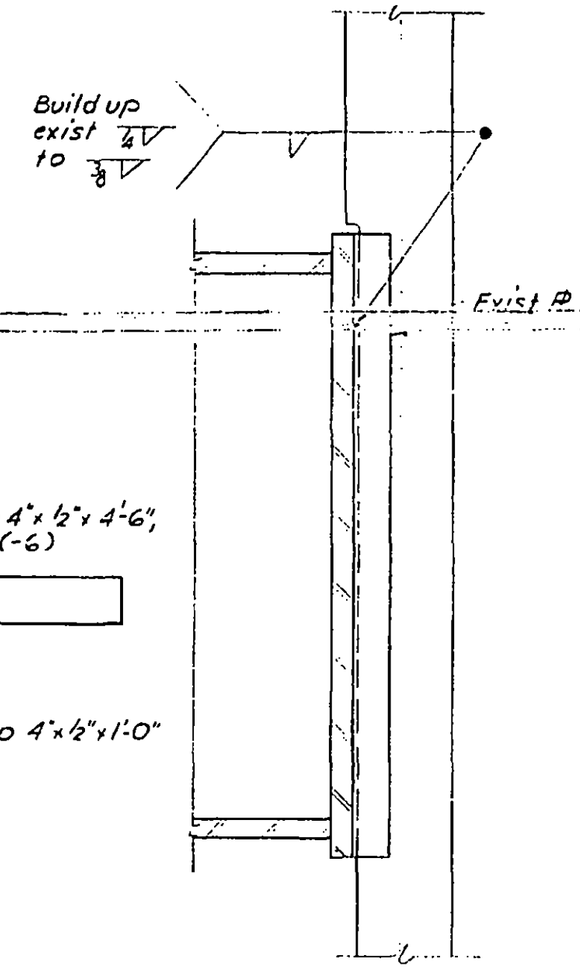

DETAIL 73 C

LICENSED PROFESSIONAL ENGINEER LESLIE E. ROBERTSON No. 34360 UNIVERSITY OF THE STATE OF NEW YORK

DESIGNED

DRAWN

REVIEWED

18-AB2-73

SKILLING, HELLE, CHRISTIANSEN, ROBERTSON — Structural & Civil Engineers

PROJECT THE WORLD TRADE CENTER | TITLE STRAP ANCHORS - CORE - DETAIL 74 | DATE 10-1-69

REVISIONS

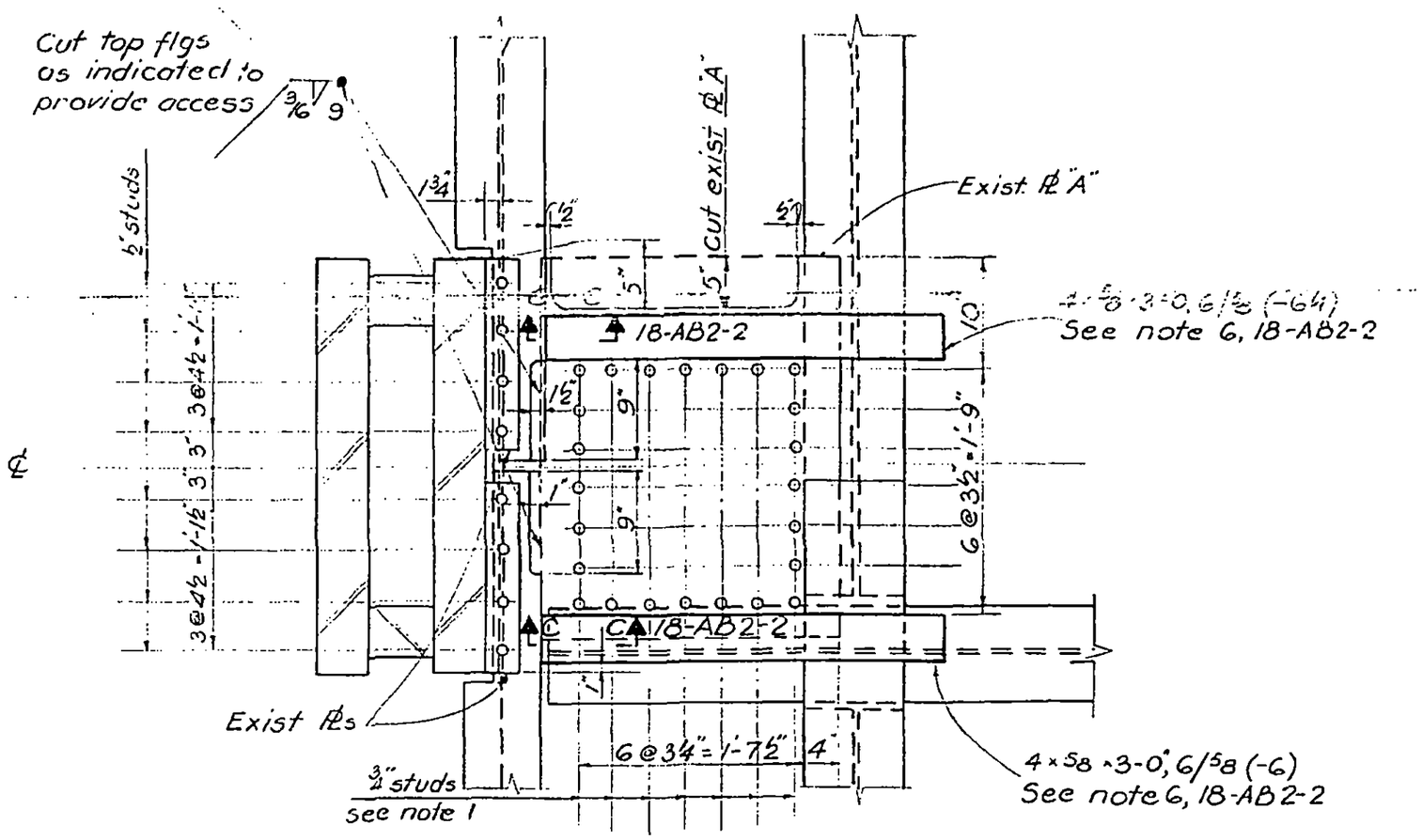

DETAIL 74A

Note 1. Studs to be place on exist ℄ "A" prior to installation of straps

LICENSED PROFESSIONAL ENGINEER
LESLIE E. ROBERTSON
No 34360
UNIVERSITY OF THE STATE OF NEW YORK

DESIGNED

DRAWN D.C. Huggins

REVIEWED

18-AB2-74.1

SKILLING, HELLE, CHRISTIANSEN, ROBERTSON — Structural & Civil Engineers

PROJECT THE WORLD TRADE CENTER | TITLE STRAP ANCHOR-CORE DETAIL 74 | DATE 10-1-69

REVISIONS

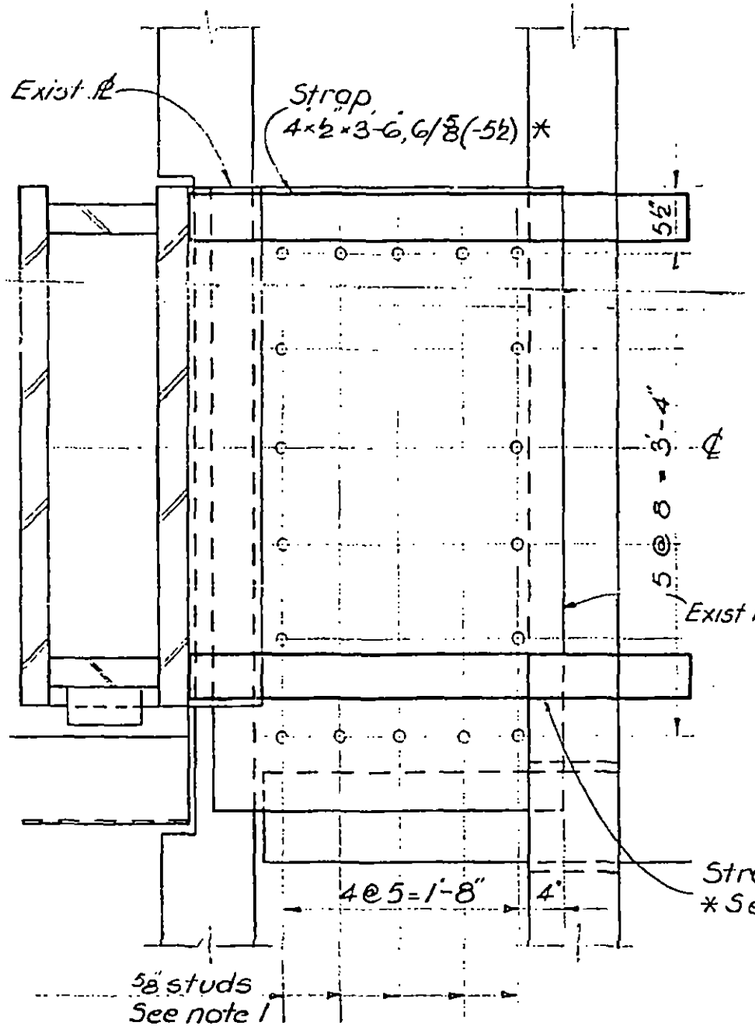

DETAIL 74B

Note 1 Studs to be place on existing ℄ A prior to installation of straps

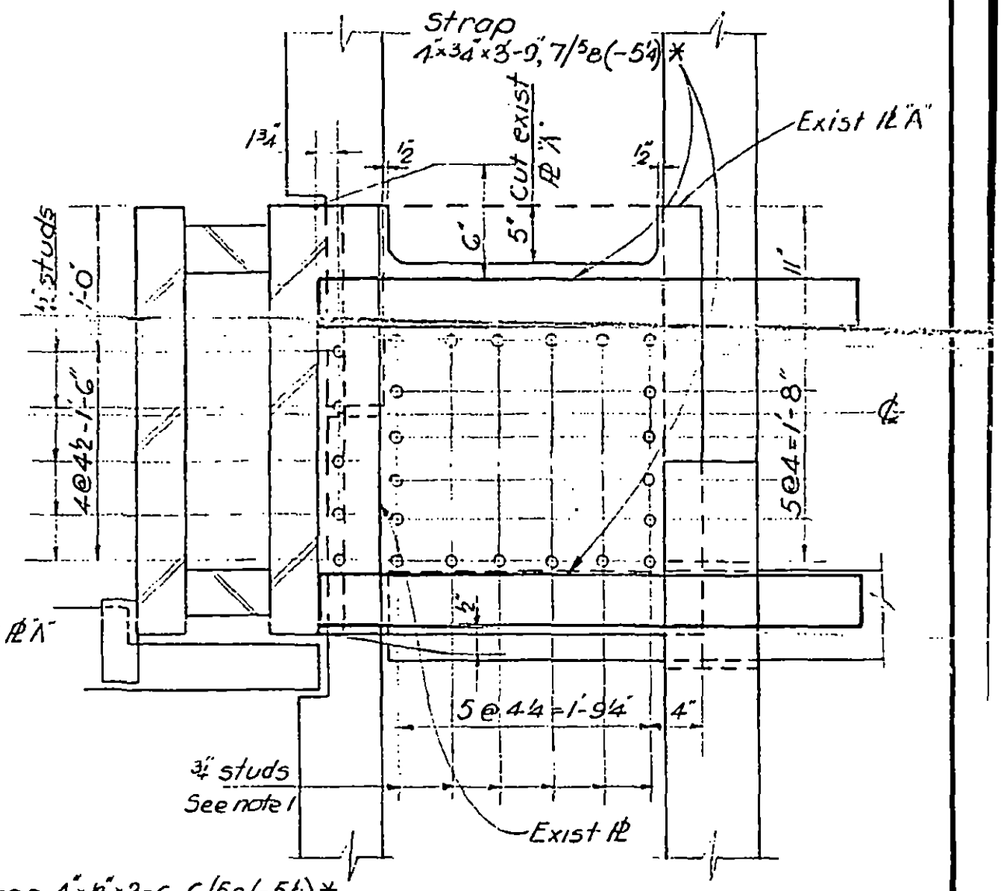

DETAIL 74C

Note 1 Studs to be place on exist ℄ A" prior to installation of straps

LICENSED PROFESSIONAL ENGINEER
LESLIE E. ROBERTSON
No. 34360
UNIVERSITY OF THE STATE OF NEW YORK

DESIGNED

DRAWN
D.C Huggins

REVIEWED

18-AB2-74.2

SKILLING, HELLE, CHRISTIANSEN, ROBERTSON — Structural & Civil Engineers

PROJECT: THE WORLD TRADE CENTER | TITLE: STRAP ANCHOR - CORE - DETAIL 75. | DATE: 10-1-69

REVISIONS

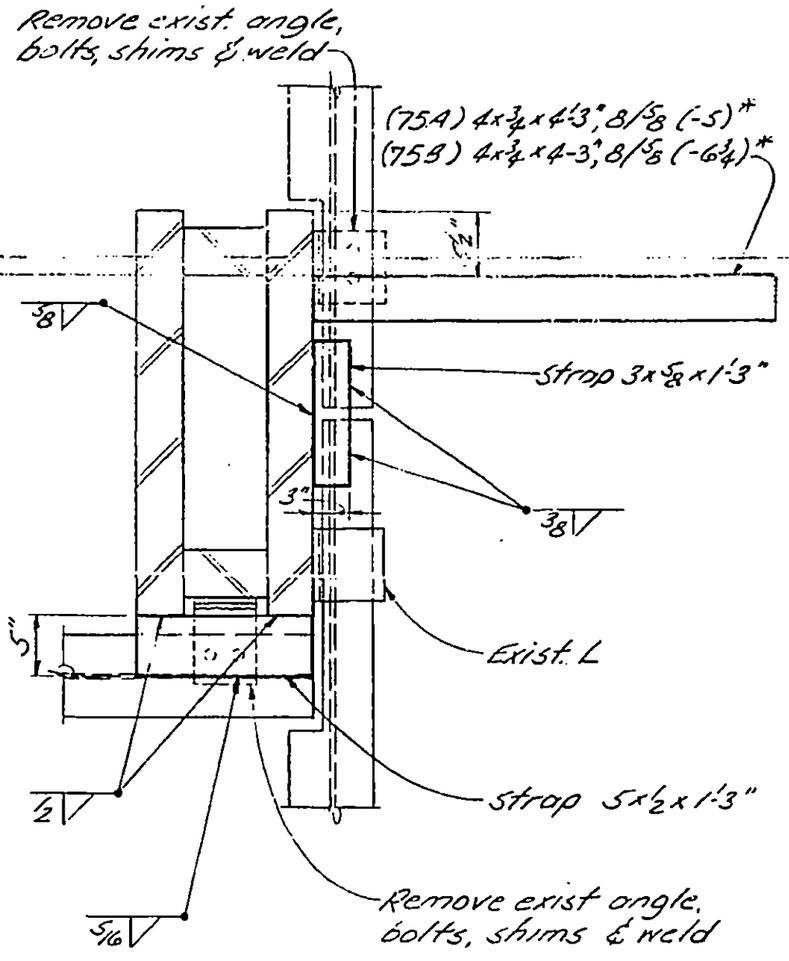

Details 75A and 75B

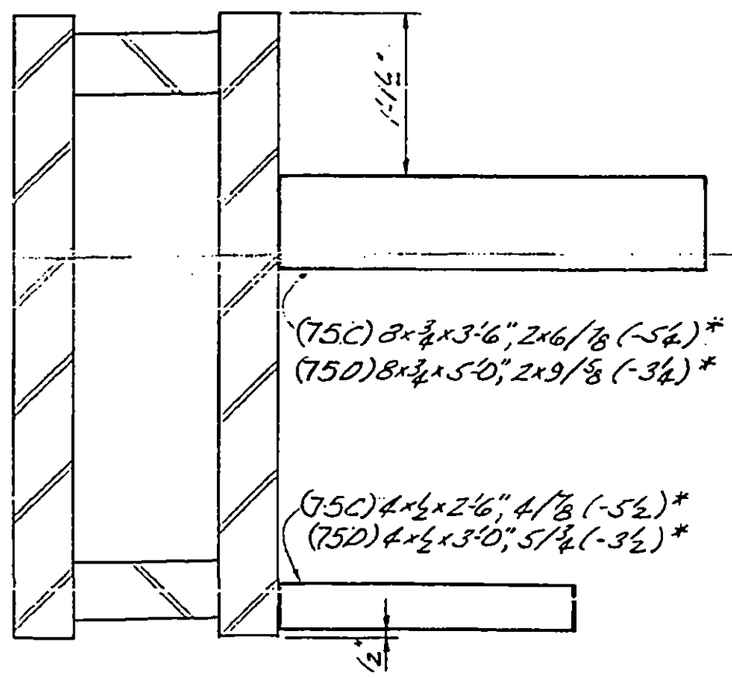

Details 75C and 75D

*See Note 6, 18-ABZ-2

LICENSED PROFESSIONAL ENGINEER LESLIE E. ROBERTSON No 34360 UNIVERSITY OF THE STATE OF NEW YORK

DESIGNED

DRAWN J. Adams

REVIEWED

18-ABZ-75

SKILLING, HELLE, CHRISTIANSEN, ROBERTSON — Structural & Civil Engineers

PROJECT: THE WORLD TRADE CENTER | TITLE: STRAP ANCHORS - CORE - DETAIL 76 | DATE: 10-1-69

REVISIONS

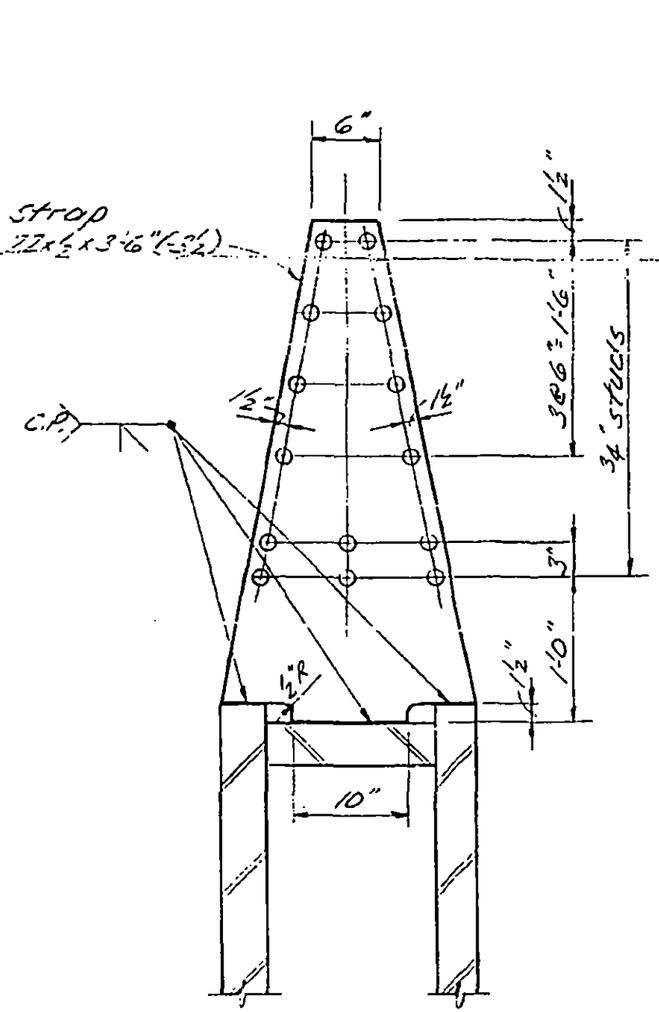

Detail 76A

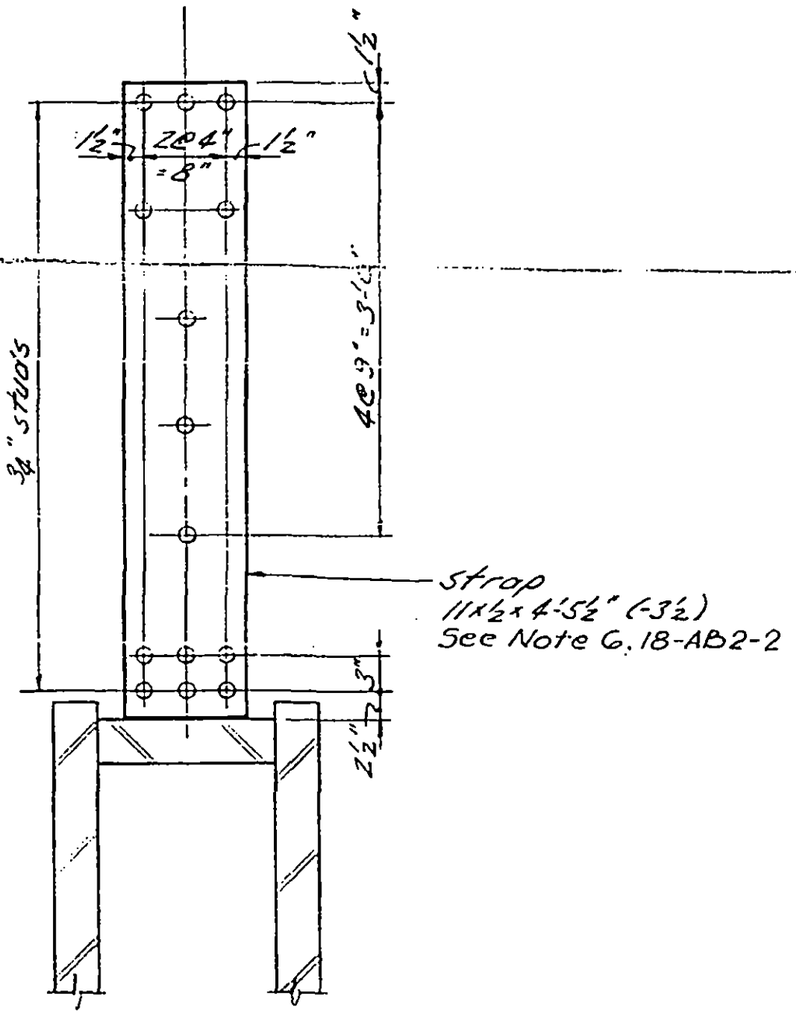

Detail 76B

LICENSED PROFESSIONAL ENGINEER — LESLIE E. ROBERTSON — No 34360 — UNIVERSITY OF THE STATE OF NEW YORK

DESIGNED

DRAWN J. Adams

REVIEWED

18-AB2-76

SKILLING, HELLE, CHRISTIANSEN, ROBERTSON — Structural & Civil Engineers

PROJECT: THE WORLD TRADE CENTER | TITLE: STRAP ANCHOR - CORE - DETAIL 77 | DATE: 10-1-69

REVISIONS

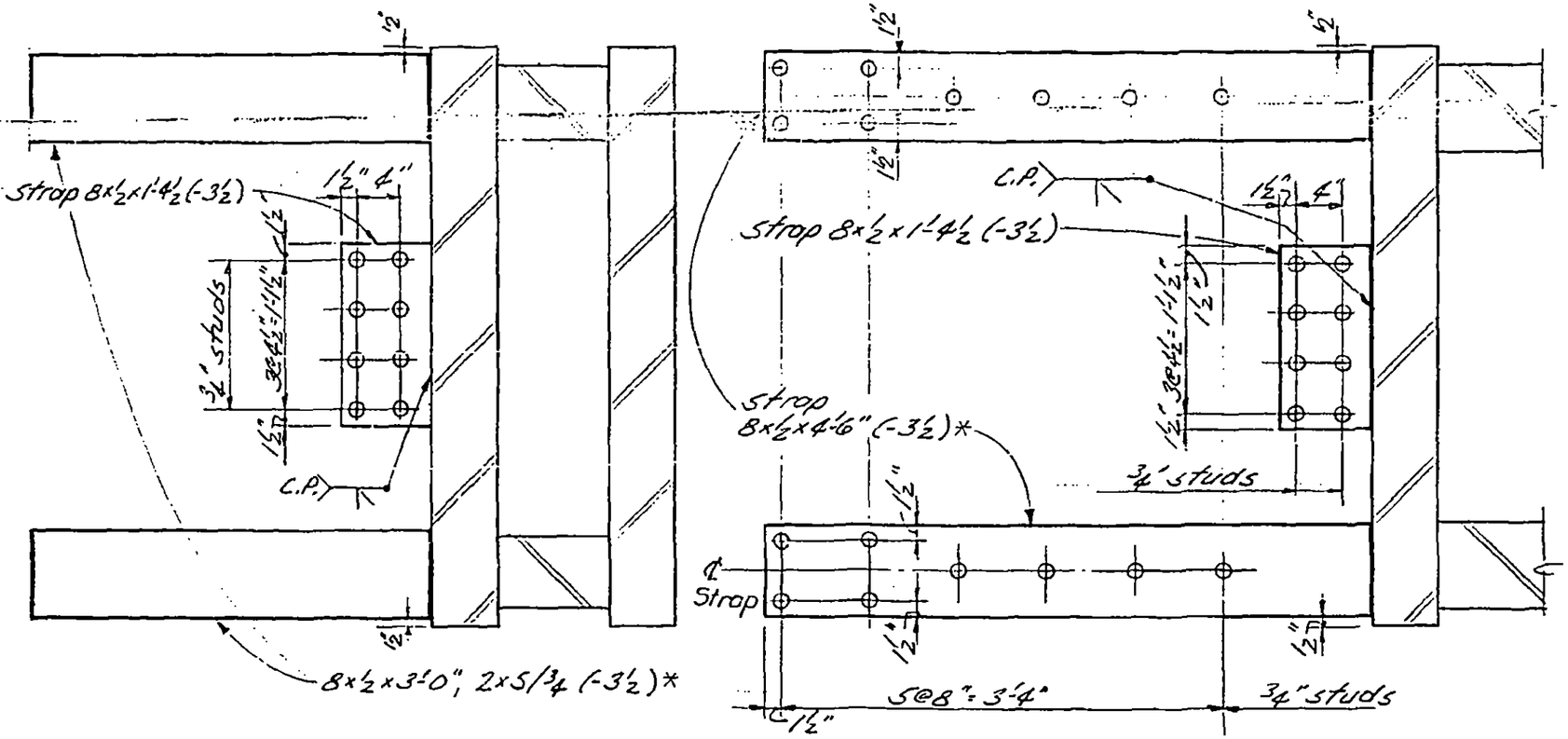

Detail 77A

Detail 77B

* See Note 6
18-AB2-2

LICENSED PROFESSIONAL ENGINEER
LESLIE E. ROBERTSON
No. 34360
UNIVERSITY OF THE STATE OF NEW YORK

DESIGNED

DRAWN
J. Adams

REVIEWED

18-AB2-77.1

SKILLING, HELLE, CHRISTIANSEN, ROBERTSON — Structural & Civil Engineers

PROJECT THE WORLD TRADE CENTER | TITLE STRAP ANCHOR - CORE - DETAIL 77 | DATE 10-1-69

REVISIONS

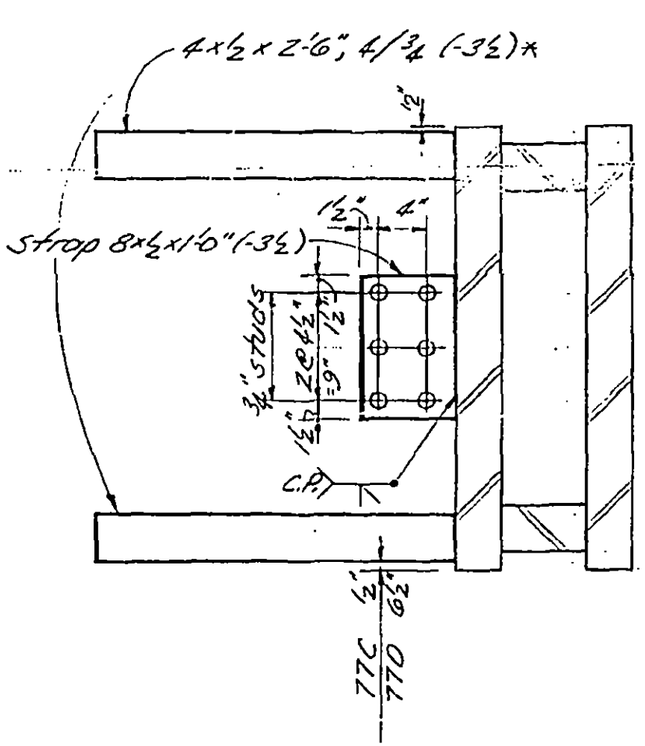

Details 77C and 77D

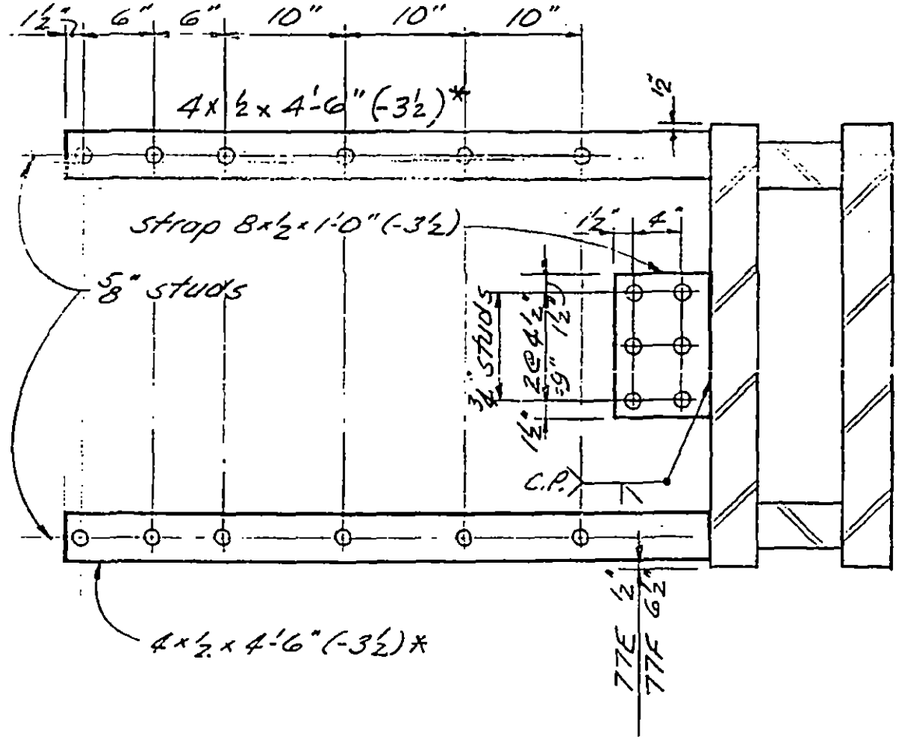

Details 77E and 77F

See Note 6
18-AB2-2

LICENSED PROFESSIONAL ENGINEER
LESLIE E. ROBERTSON
No 34360
UNIVERSITY OF THE STATE OF NEW YORK

DESIGNED

DRAWN
J. Adams

REVIEWED

18-AB2-77.2

SKILLING HELLE CHRISTIANSEN ROBERTSON — Structural & Civil Engineers

PROJECT: THE WORLD TRADE CENTER | TITLE: STRAP ANCHORS - CORE - DETAIL 78 | DATE: 10/1/69

REVISIONS

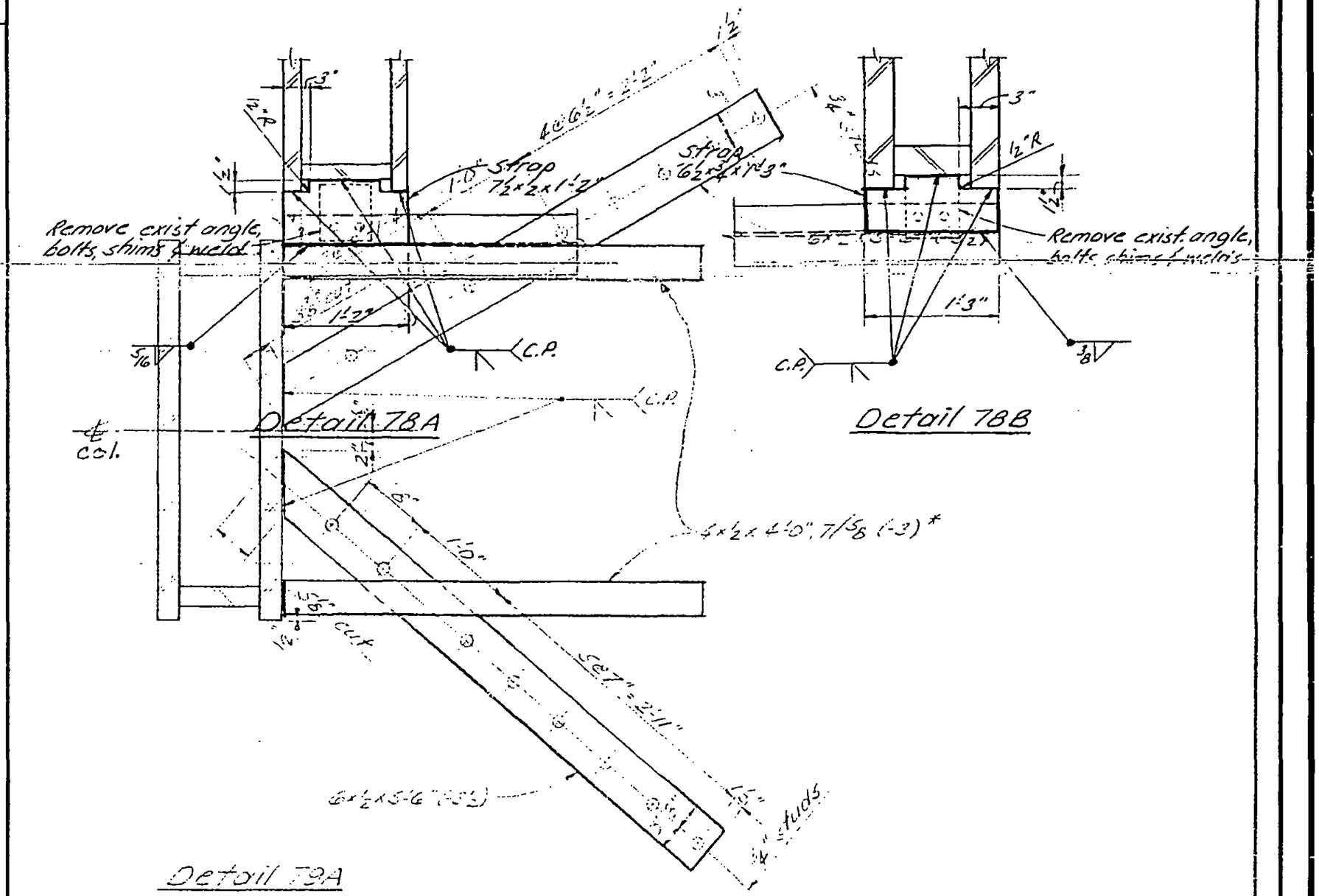

* See Note 3, 18-482-2.

DESIGNED

DRAWN: J. J. Adams

REVIEWED

18 1882 078

MICROCOPY RESOLUTION TEST CHART (ANSI and ISO TEST CHART No. 2)

CORRECTION

The preceding document has been re-photographed to assure legibility and its image appears immediately hereafter.

SKILLING, HELLE, CHRISTIANSEN, ROBERTSON — Structural & Civil Engineers

PROJECT THE WORLD TRADE CENTER | TITLE STRAP ANCHORS - CORE - DETAIL 78 | DATE 10/1/69

REVISIONS

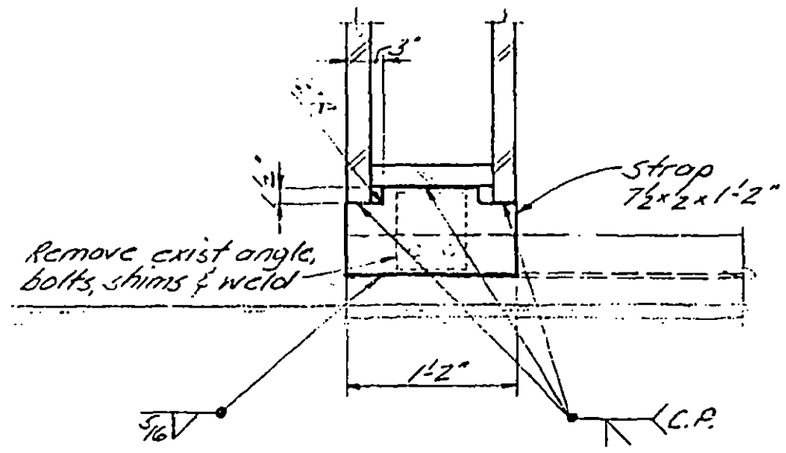

Detail 78A

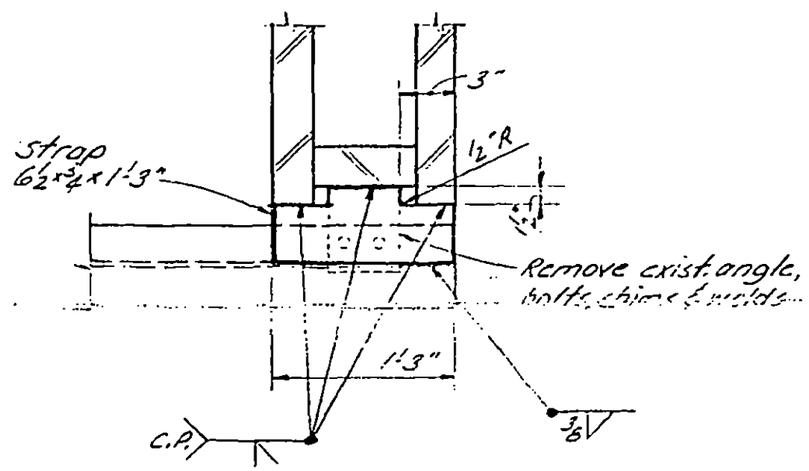

Detail 78B

LICENSED PROFESSIONAL ENGINEER
LESLIE E. ROBERTSON
No. 34360
UNIVERSITY OF THE STATE OF NEW YORK

DESIGNED

DRAWN
J. Ackerman

REVIEWED

18-A82-78

SKILLING, HELLE, CHRISTIANSEN, ROBERTSON — Structural & Civil Engineers

PROJECT: THE WORLD TRADE CENTER | TITLE: STRAP ANCHORS - CORE - DETAIL 79 | DATE: 10-1-69

REVISIONS

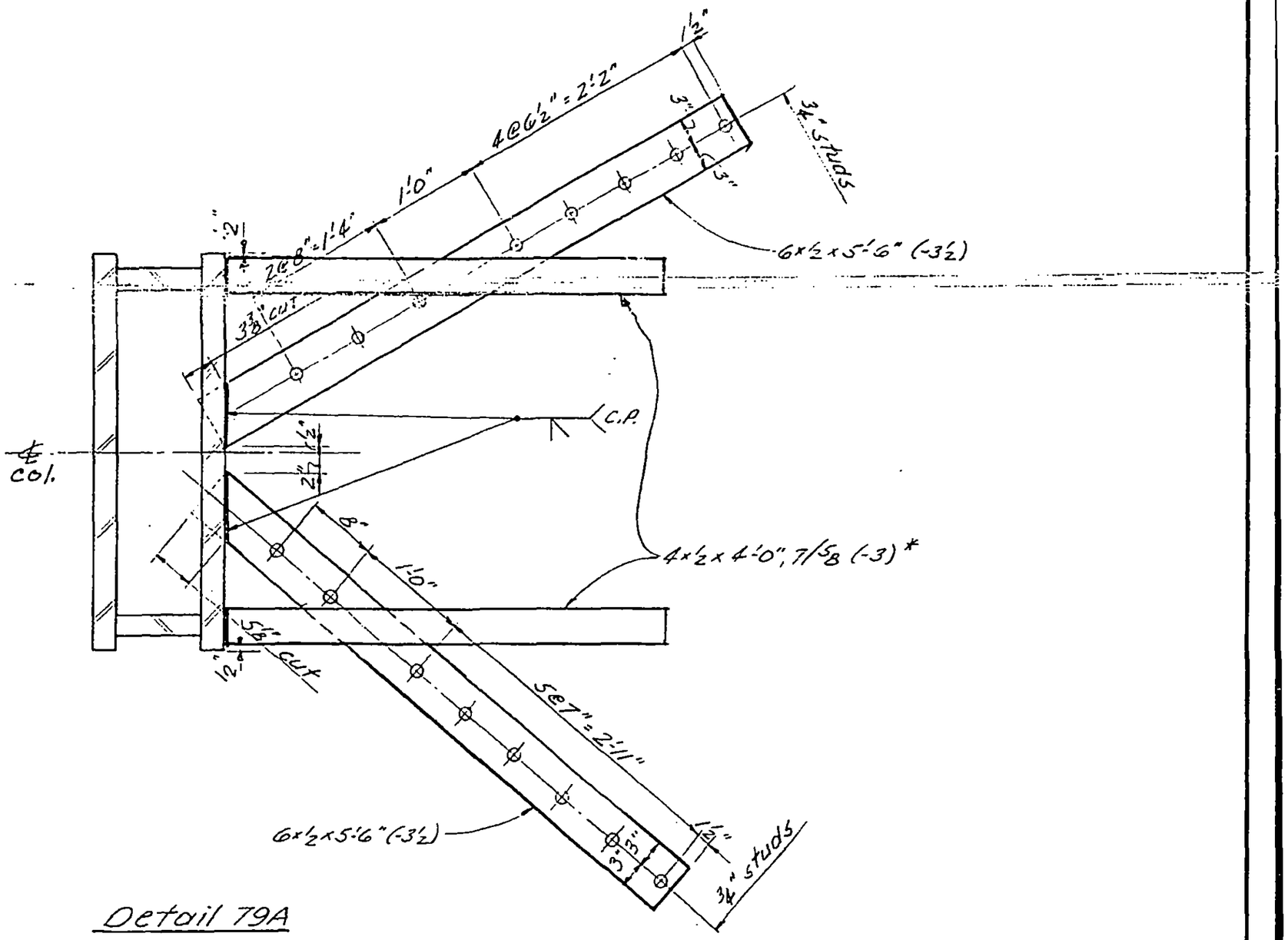

Detail 79A

* See Note 6, 18-ABZ-2.

LICENSED PROFESSIONAL ENGINEER — LESLIE E. ROBERTSON — No. 34360 — UNIVERSITY OF THE STATE OF NEW YORK

DESIGNED

DRAWN J. Adams

REVIEWED

18-ABZ-79.1

SKILLING, HELLE, CHRISTIANSEN, ROBERTSON — Structural & Civil Engineers

PROJECT THE WORLD TRADE CENTER | TITLE STRAP ANCHORS - CORE - DETAIL 79 | DATE 10-1-69

REVISIONS

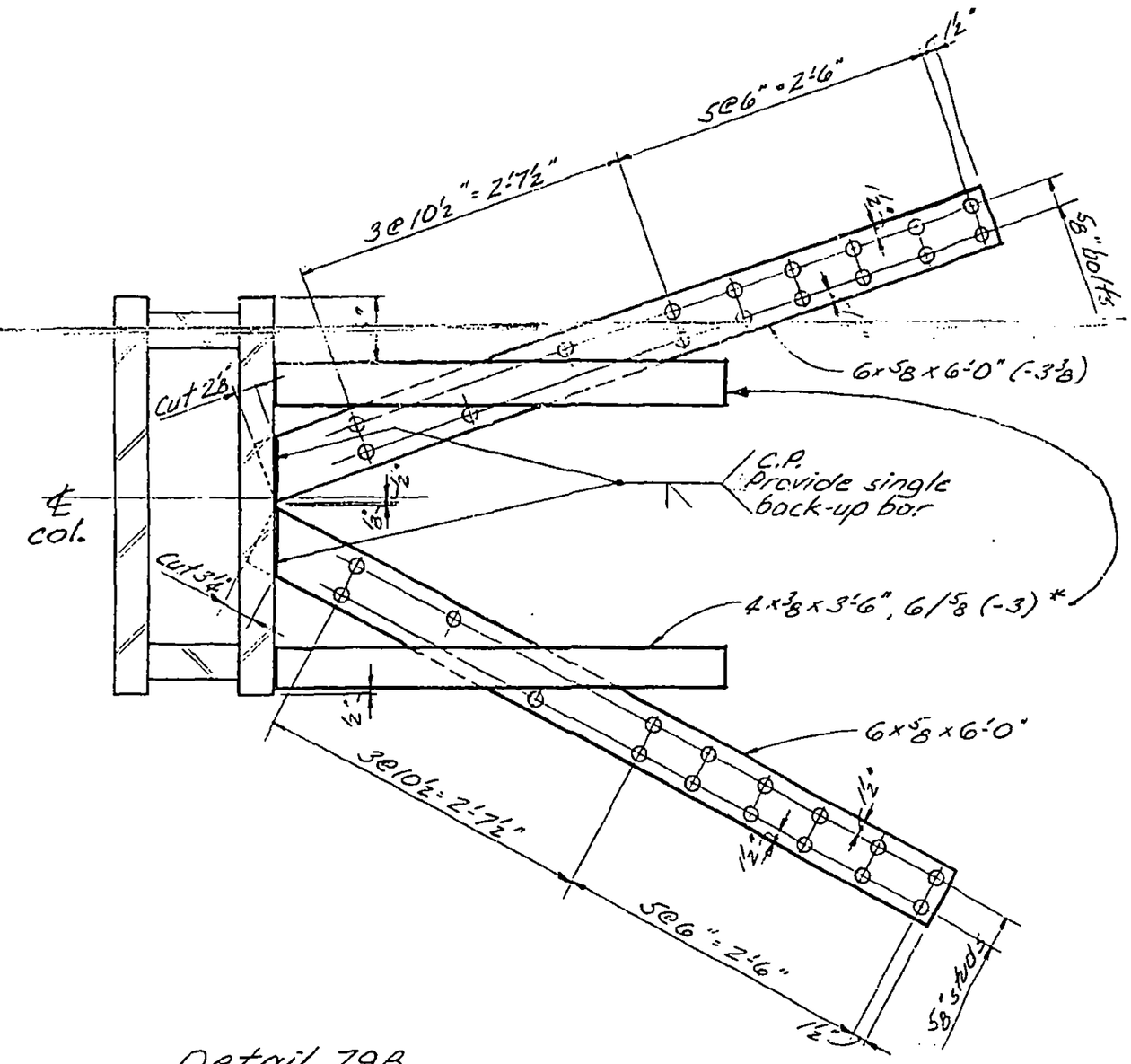

Detail 79B

*See Note 6, 18-ABZ-2

LICENSED PROFESSIONAL ENGINEER — LESLIE E. ROBERTSON — No. 34360 — UNIVERSITY OF THE STATE OF NEW YORK

DESIGNED

DRAWN J. Adams

REVIEWED

18-ABZ-79.2

SKILLING, HELLE, CHRISTIANSEN, ROBERTSON — Structural & Civil Engineers

PROJECT: THE WORLD TRADE CENTER | TITLE: STRAP ANCHORS - CORE - DETAIL 80 | DATE: 10-1-69

REVISIONS

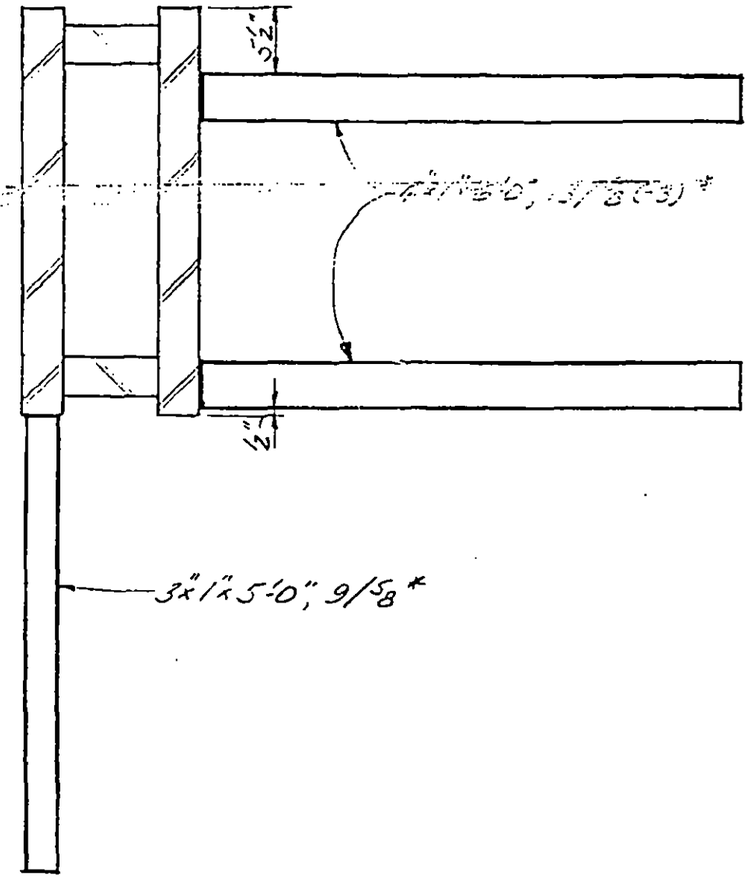

Detail 80A

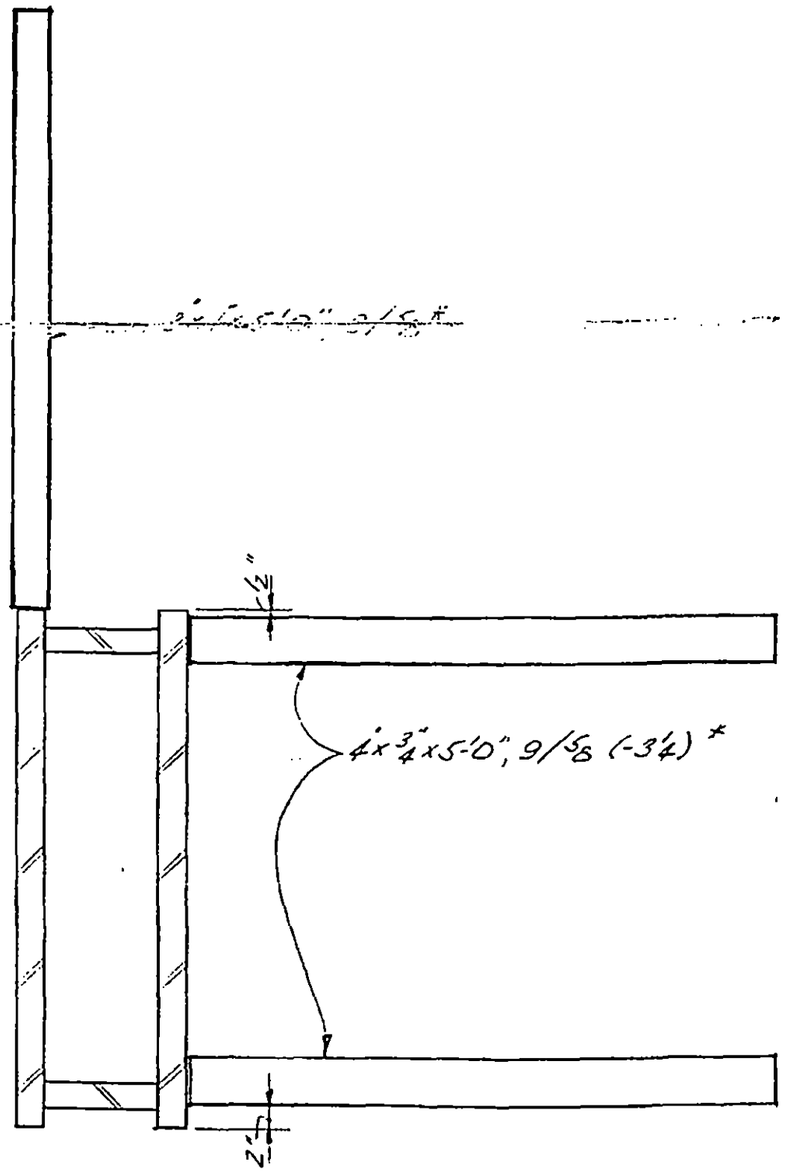

Detail 80B

*See Note 6, 18-AB2-2

LICENSED PROFESSIONAL ENGINEER — LESLIE E. ROBERTSON — NO 34360 — UNIVERSITY OF THE STATE OF NEW YORK

DESIGNED

DRAWN J. Adams

REVIEWED

18-AB2-80

SKILLING, HELLE, CHRISTIANSEN, ROBERTSON — Structural & Civil Engineers

PROJECT: TIE WORLD TRADE CENTER | TITLE: STRAP ANCHORS - CORE - DETAIL 81 | DATE: 10-1-69

REVISIONS

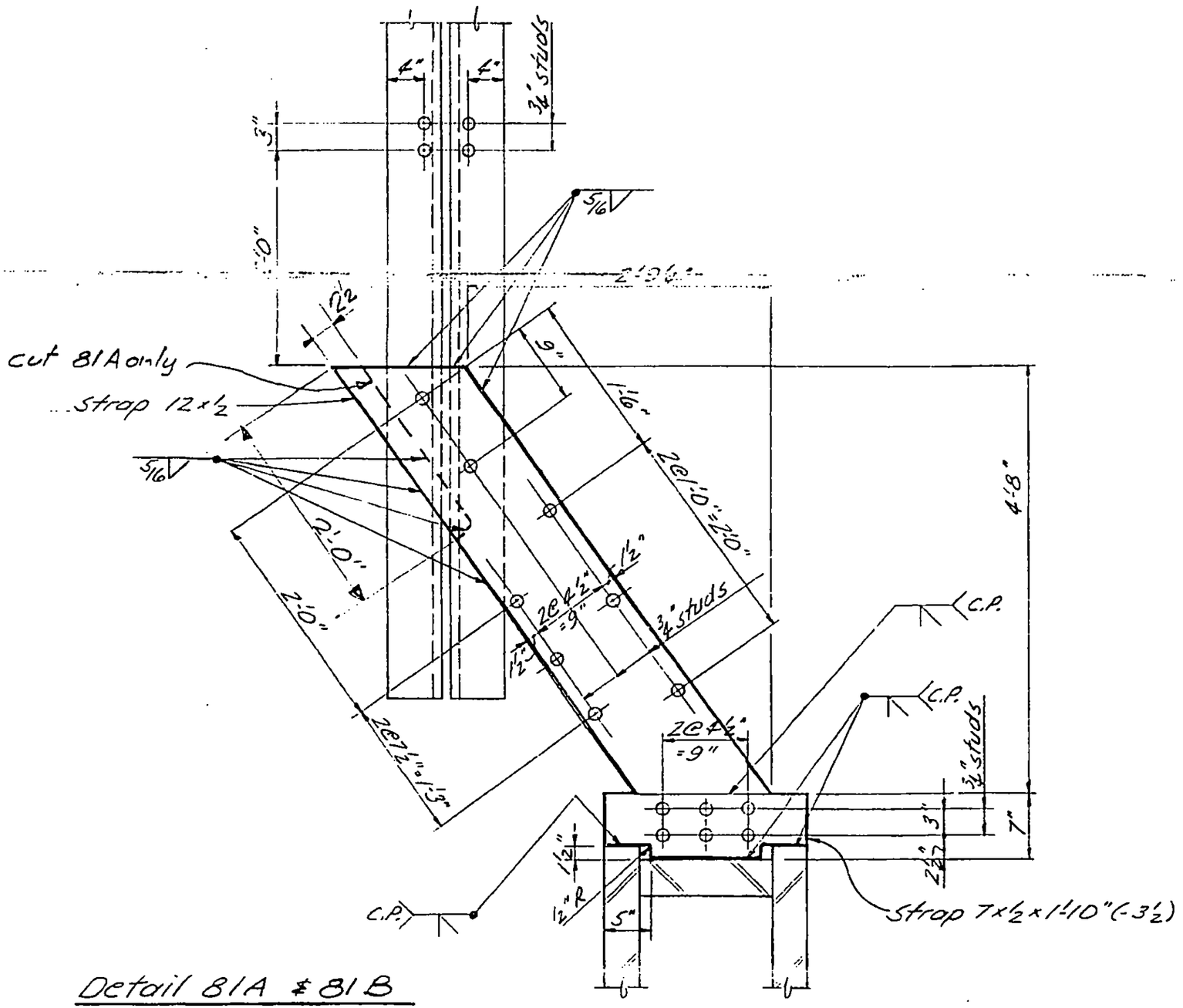

Detail 81A & 81B

LICENSED PROFESSIONAL ENGINEER — LESLIE E. ROBERTSON — No. 34360 — UNIVERSITY OF THE STATE OF NEW YORK

DESIGNED

DRAWN J. Adams

REVIEWED

18-A82-81.1

SKILLING, HELLE, CHRISTIANSEN, ROBERTSON — Structural & Civil Engineers

PROJECT: THE WORLD TRADE CENTER | TITLE: STRAP ANCHORS - CORE - DETAIL 81 | DATE: 10-1-69

REVISIONS

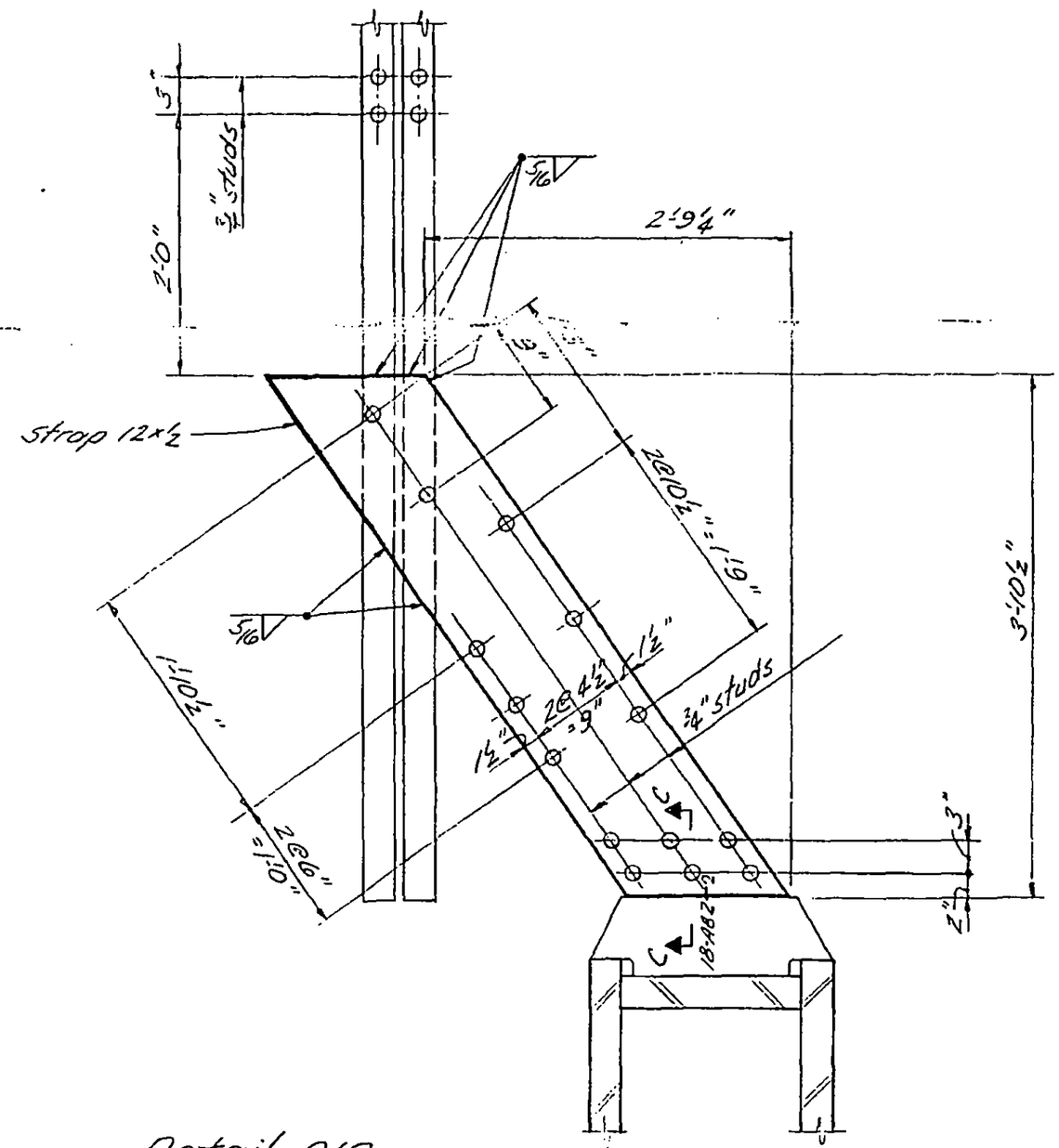

Detail 81C

LICENSED PROFESSIONAL ENGINEER
LESLIE E. ROBERTSON
NO 34360
UNIVERSITY OF THE STATE OF NEW YORK

DESIGNED

DRAWN
J. Adams

REVIEWED

18-AB2-81.2

SKILLING, HELLE, CHRISTIANSEN, ROBERTSON — Structural & Civil Engineers

PROJECT	TITLE	DATE
THE WORLD TRADE CENTER	ANCHOR KEY PLANS - EXTERIOR WALL - INDEX	11/ 7/69

REVISIONS

18-AB3- 1	INDEX	
18-AB3- 2	FLOOR 7	
18-AB3- 3.1	FLOOR 9 TOWER A	
18-AB3- 3.2	FLOOR 9 TOWER B	
18-AB3- 4.1	FLOORS 10-24, 26-40, 50-58, 60-74, 84-91, 93-106 TOWER A	
18-AB3- 4.2	FLOORS 14-24, 26-40, 50-58, 60-74, 84-91, 93-106 TOWER B	
18-AB3- 4.3	FLOOR 10 TOWER B	
18-AB3- 4.4	FLOOR 11 TOWER B	
18-AB3- 4.5	FLOOR 12 TOWER B	
18-AB3- 4.6	FLOOR 13 TOWER B	
18-AB3- 5	FLOORS 25, 59, 92	
18-AB3- 6	FLOORS 41, 75	
18-AB3- 7.1	FLOOR 43 TOWER A	
[illegible]	[illegible]	
18-AB3- 8.1	FLOOR 44 TOWER A	
18-AB3- 8.2	FLOOR 44 TOWER B	
18-AB3- 9	FLOOR 45	
18-AB3-10	FLOORS 46 - 49	
18-AB3-11	FLOOR 77	
18-AB3-12	FLOOR 78	
18-AB3-13	FLOOR 79	
18-AB3-14	FLOORS 80 - 83	
18-AB3-15	FLOOR 107	HOLD
18-AB3-16	FLOOR 108	HOLD
18-AB3-17	FLOOR 110	HOLD

LICENSED PROFESSIONAL ENGINEER
LESLIE E. ROBERTSON
No. 34360
UNIVERSITY OF THE STATE OF NEW YORK

SKILLING, HELLE, CHRISTIANSEN, ROBERTSON — Structural & Civil Engineers

PROJECT: THE WORLD TRADE CENTER | TITLE: ANCHOR PLATE KEY PLAN FLOOR 7 | DATE: 2-7-69

REVISIONS

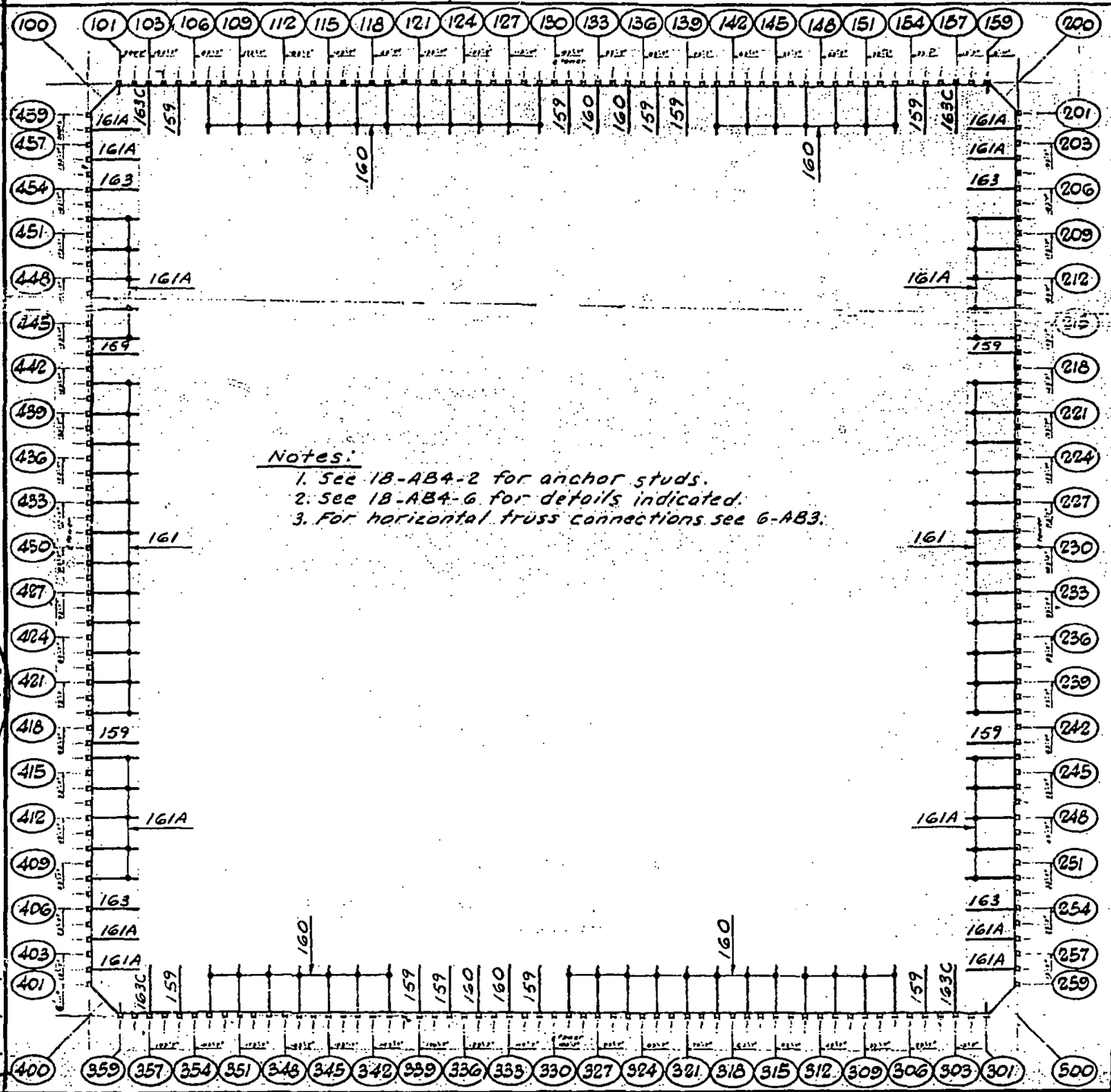

NORTH

TOWER A

NORTH

TOWER B

Notes:
1. See 18-AB4-2 for anchor studs.
2. See 18-AB4-6 for details indicated.
3. For horizontal truss connections see 6-AB3.

LICENSED PROFESSIONAL ENGINEER — LESLIE E. ROBERTSON — No. 34360 — UNIVERSITY OF THE STATE OF NEW YORK

DESIGNED S. Karp
DRAWN A. Frangui
REVIEWED W. Brewer

18-AB3-2

SKILLING, HELLE, CHRISTIANSEN, ROBERTSON — Structural & Civil Engineers

PROJECT: THE WORLD TRADE CENTER | TITLE: ANCHOR PLATE KEY PLAN FLOOR 9 TOWER A | DATE: 2-7-69

REVISIONS

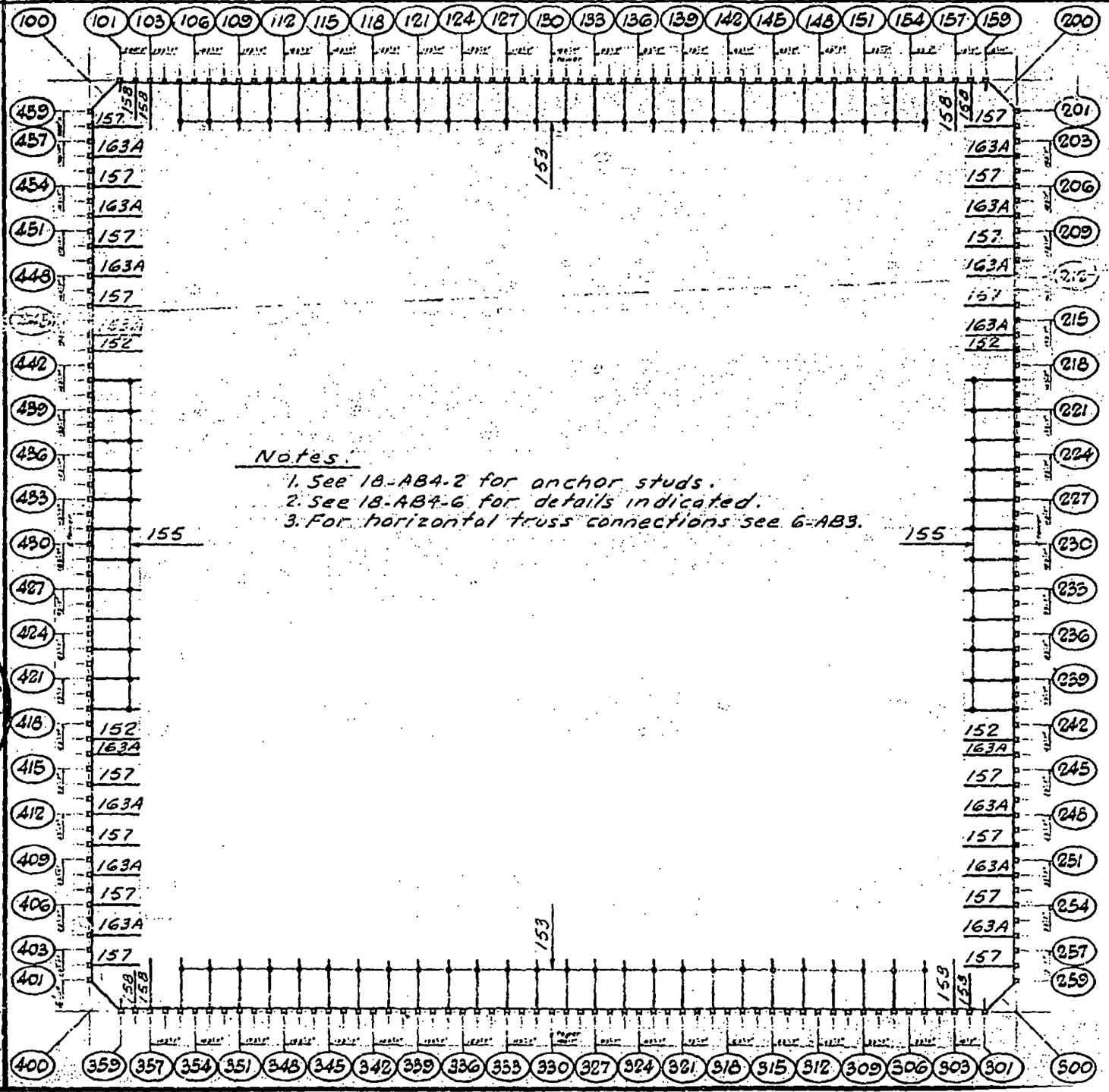

Notes:

1. See 18-AB4-2 for anchor studs.
2. See 18-AB4-6 for details indicated.
3. For horizontal truss connections see 6-AB3.

LICENSED PROFESSIONAL ENGINEER — LESLIE E. ROBERTSON — No. 34360 — UNIVERSITY OF THE STATE OF NEW YORK

DESIGNED: S. Karp
DRAWN: A. Franqui
REVIEWED: W. Brewer

18-A3-3.1

SKILLING, HELLE, CHRISTIANSEN, ROBERTSON — Structural & Civil Engineers

PROJECT: THE WORLD TRADE CENTER

TITLE: ANCHOR PLATE KEY PLAN FLOOR 9 TOWER B

DATE: 2-7-69

REVISIONS

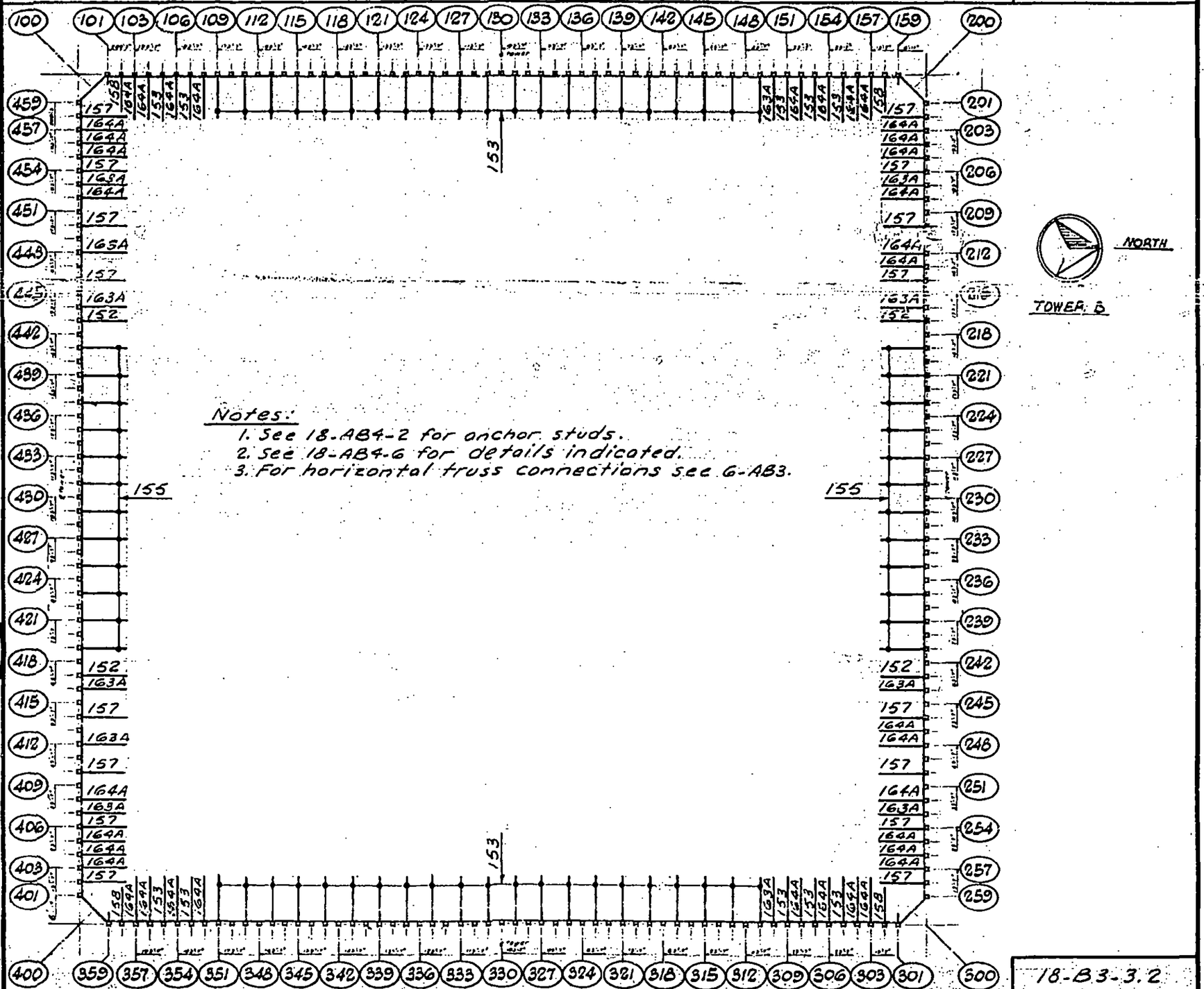

Notes:
1. See 18-AB4-2 for anchor studs.
2. See 18-AB4-6 for details indicated.
3. For horizontal truss connections see 6-AB3.

LICENSED PROFESSIONAL ENGINEER
LESLIE E. ROBERTSON
No. 34360
UNIVERSITY OF THE STATE OF NEW YORK

DESIGNED: S. Kops
DRAWN: A. Franqui
REVIEWED: W. Brewer

18-B3-3.2

SKILLING, HELLE, CHRISTIANSEN, ROBERTSON — Structural & Civil Engineers

PROJECT: THE WORLD TRADE CENTER

TITLE: ANCHOR PLATE KEY PLAN FLOORS TOWER A (See Table)

DATE: 2-7-69

REVISIONS

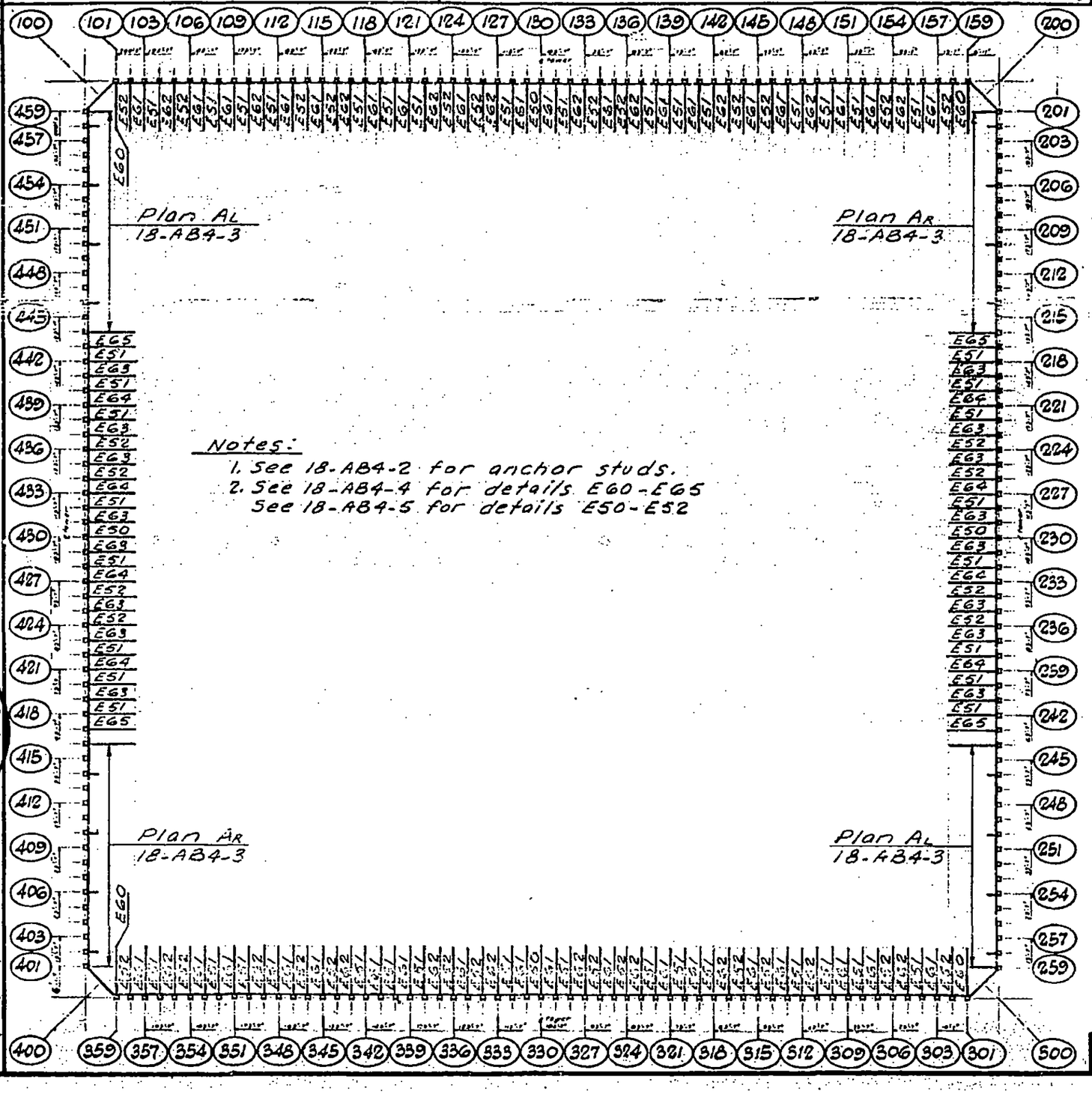

NORTH

TOWER A

Floors Included
10-24
25-40
50-58
60-74
84-91
93-106

Notes:

1. See 18-AB4-2 for anchor studs.
2. See 18-AB4-4 for details E60-E65
   See 18-AB4-5 for details E50-E52

LICENSED PROFESSIONAL ENGINEER — LESLIE E. ROBERTSON — No. 34360 — UNIVERSITY OF THE STATE OF NEW YORK

DESIGNED S. Kemp

DRAWN A. Franqui

REVISED W. Brewer

18-A3-4.1

SKILLING, HELLE, CHRISTIANSEN, ROBERTSON — **Structural & Civil Engineers**

PROJECT: THE WORLD TRADE CENTER

TITLE: ANCHOR PLATE KEY PLAN FLOORS TOWER B (See Table)

DATE: 2-7-69

REVISIONS

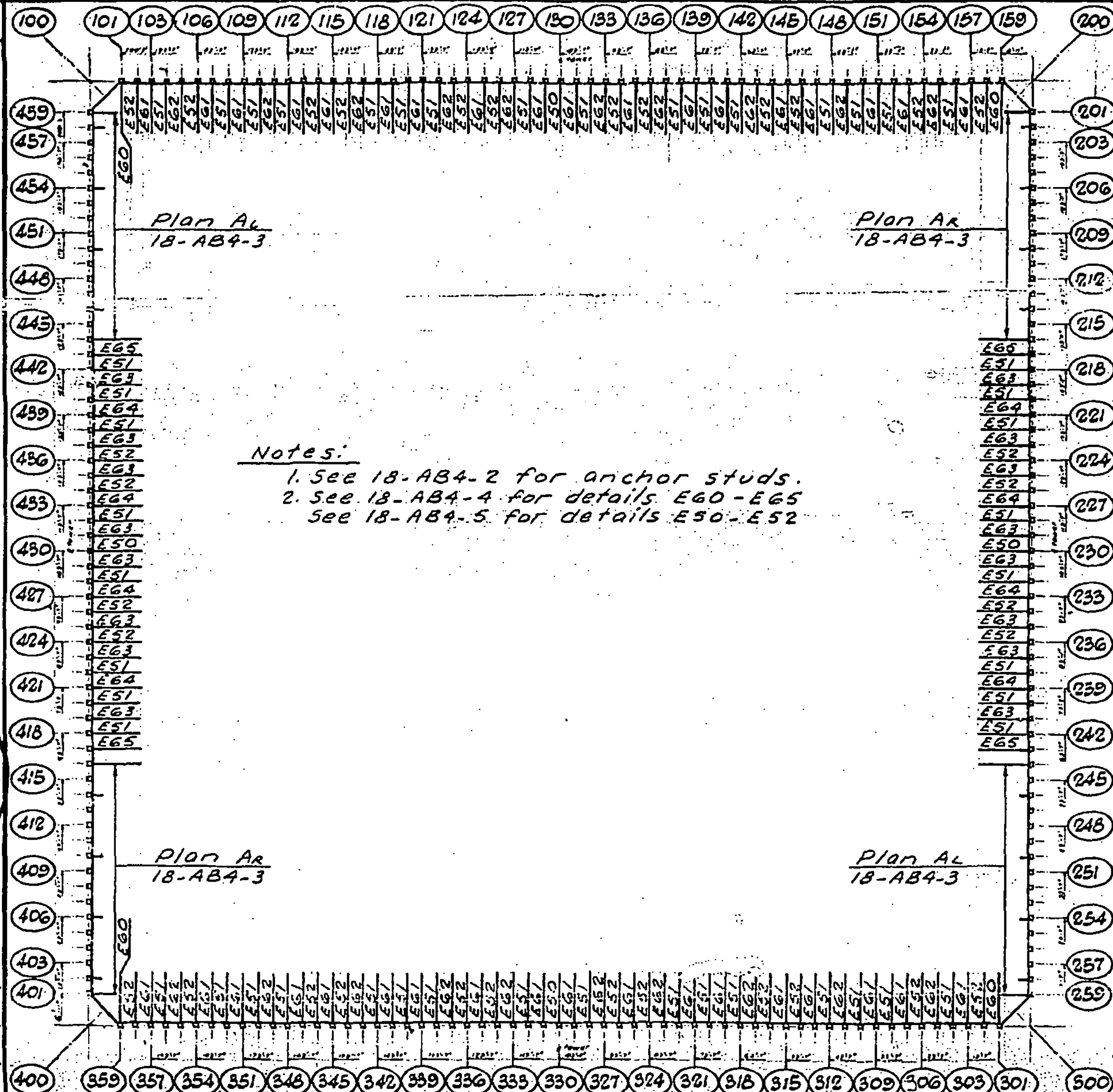

Notes:
1. See 18-AB4-2 for anchor studs.
2. See 18-AB4-4 for details E60-E65
See 18-AB4-5 for details E50-E52

NORTH

TOWER B

Floors Included
14-24
26-40
50-58
60-74
84-91
93-106

LICENSED PROFESSIONAL ENGINEER — LESLIE E. ROBERTSON — No. 34360 — UNIVERSITY OF THE STATE OF NEW YORK

DESIGNED: S. Kang

DRAWN: H. Frangui

REVIEWED: W. Brewer

18-B3-4.2

SKILLING, HELLE, CHRISTIANSEN, ROBERTSON — Structural & Civil Engineers

PROJECT: THE WORLD TRADE CENTER | TITLE: ANCHOR PLATE KEY PLAN 10TH FLOOR TOWER B | DATE: 11-7-69

REVISIONS

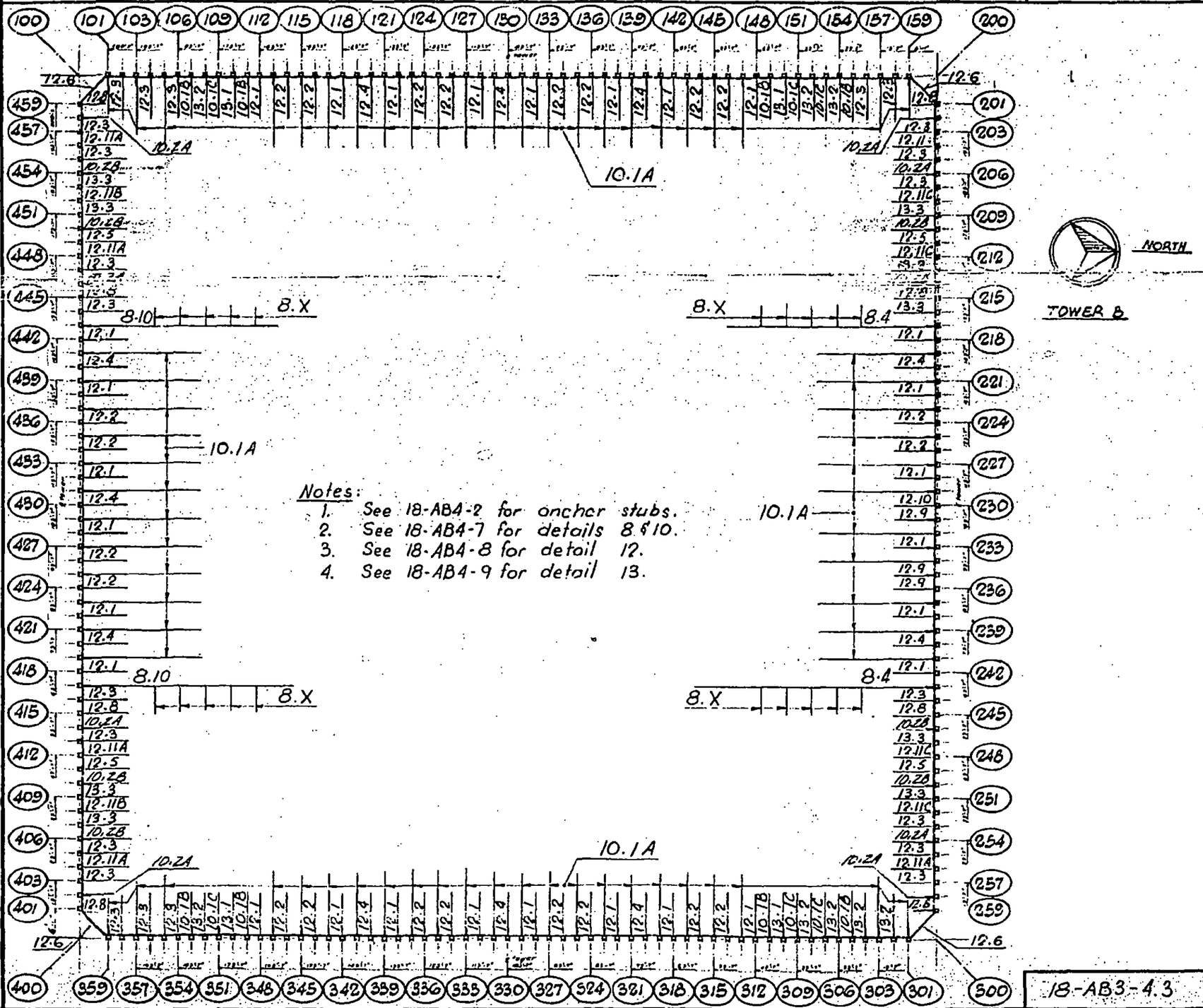

DESIGNED

DRAWN: T Terrelonge

REVIEWED

18-AB3-4.3

SKILLING, HELLE, CHRISTIANSEN, ROBERTSON — Structural & Civil Engineers

PROJECT: THE WORLD TRADE CENTER

TITLE: ANCHOR PLATE KEY PLAN 11TH FLOOR TOWER 'B'

DATE: 11-7-69

REVISIONS

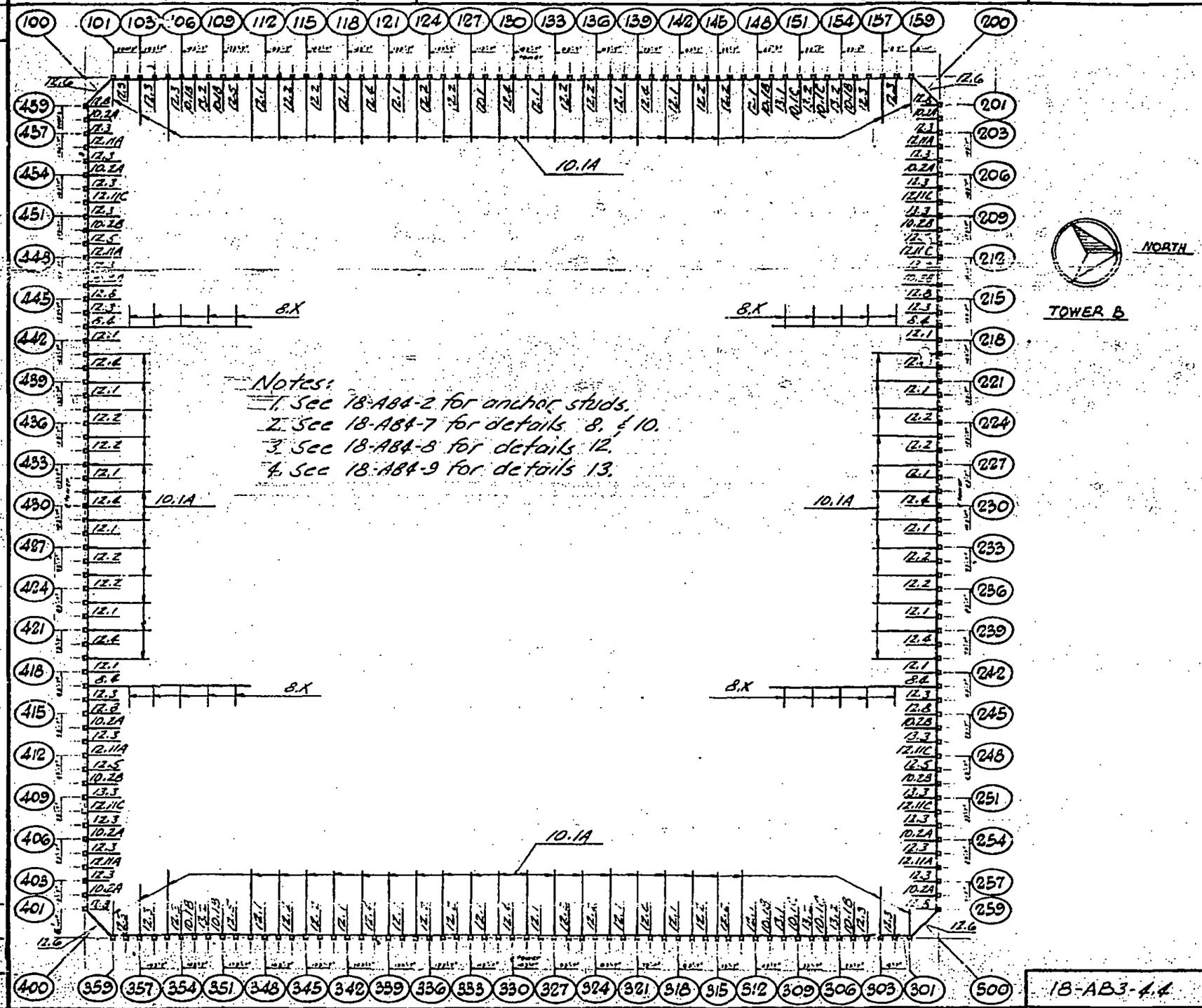

Notes:

1. See 18-AB4-2 for anchor studs.
2. See 18-AB4-7 for details 8, & 10.
3. See 18-AB4-8 for details 12.
4. See 18-AB4-9 for details 13.

DESIGNED

DRAWN

REVIEWED

18-AB3-4.4

SKILLING, HELLE, CHRISTIANSEN, ROBERTSON — Structural & Civil Engineers

PROJECT: THE WORLD TRADE CENTER | TITLE: ANCHOR PLATE KEY PLAN 12TH FLOOR TOWER B | DATE: 11-7-69

REVISIONS

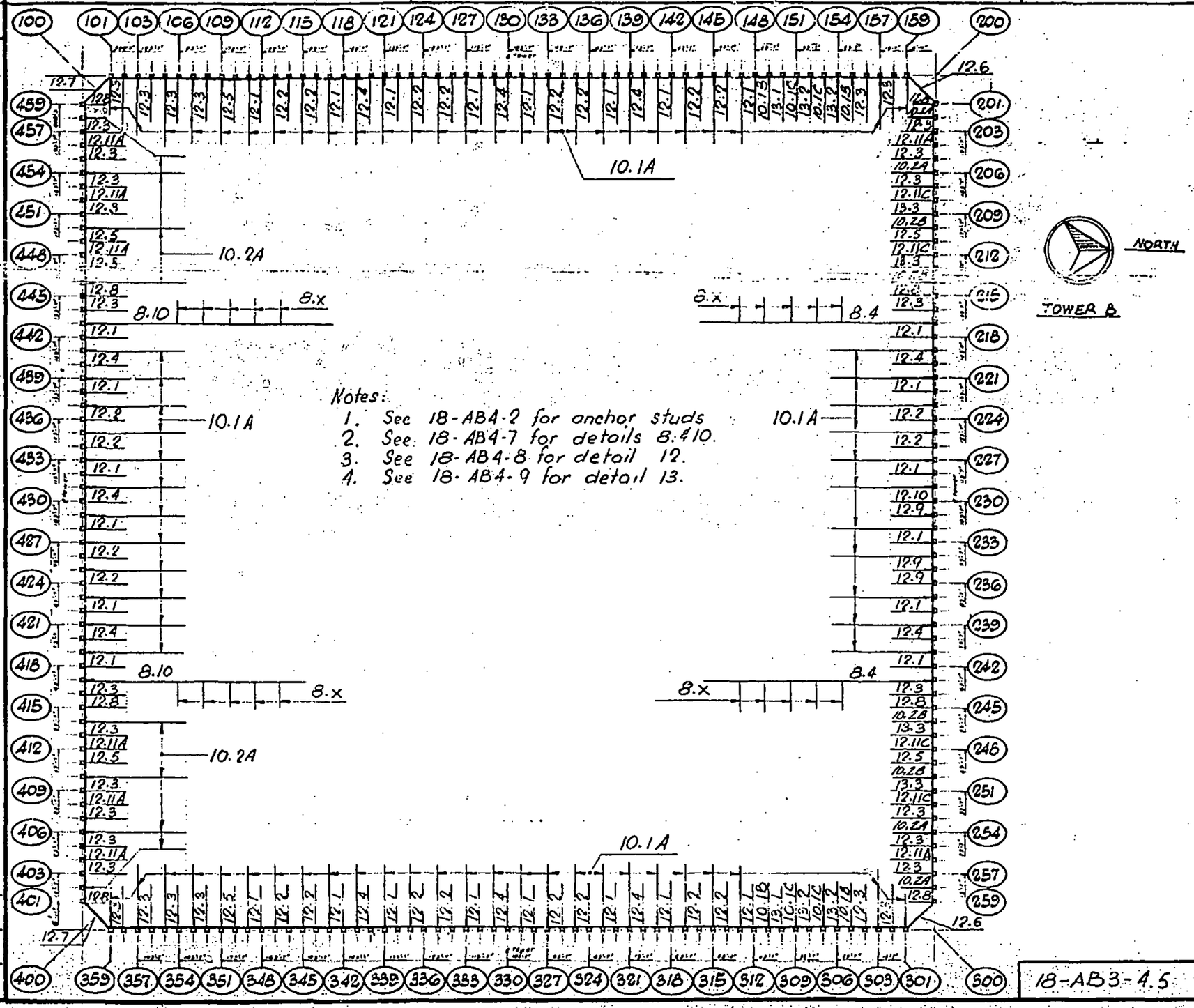

Notes:

1. See 18-AB4-2 for anchor studs
2. See 18-AB4-7 for details 8.&10.
3. See 18-AB4-8 for detail 12.
4. See 18-AB4-9 for detail 13.

DESIGNED

DRAWN T. Terrelonge

REVIEWED

18-AB3-4.5

SKILLING, HELLE, CHRISTIANSEN, ROBERTSON — Structural & Civil Engineers

PROJECT: THE WORLD TRADE CENTER

TITLE: ANCHOR PLATE KEY PLAN 13TH FLOOR TOWER 'B'

DATE: 11-7-69

REVISIONS

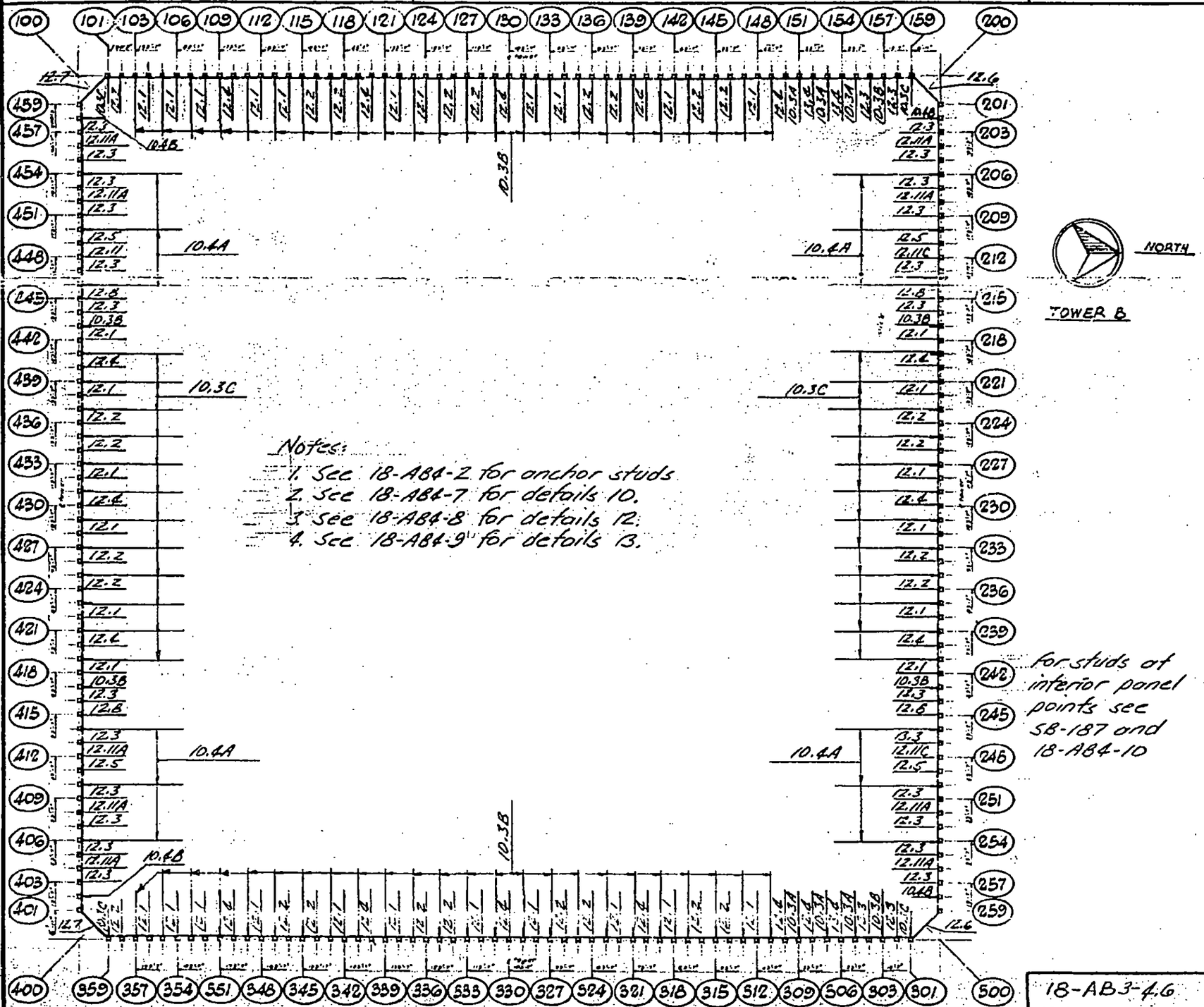

Notes:

1. See 18-AB4-2 for anchor studs
2. See 18-AB4-7 for details 10.
3. See 18-AB4-8 for details 12.
4. See 18-AB4-9 for details 13.

for studs at interior panel points see SB-187 and 18-AB4-10

DESIGNED

DRAWN

REVIEWED

18-AB3-4.6

SKILLING, HELLE, CHRISTIANSEN, ROBERTSON — Structural & Civil Engineers

PROJECT: THE WORLD TRADE CENTER

TITLE: ANCHOR PLATE KEY PLAN FLOORS 25, 59, 92

DATE: 2-7-69

REVISIONS

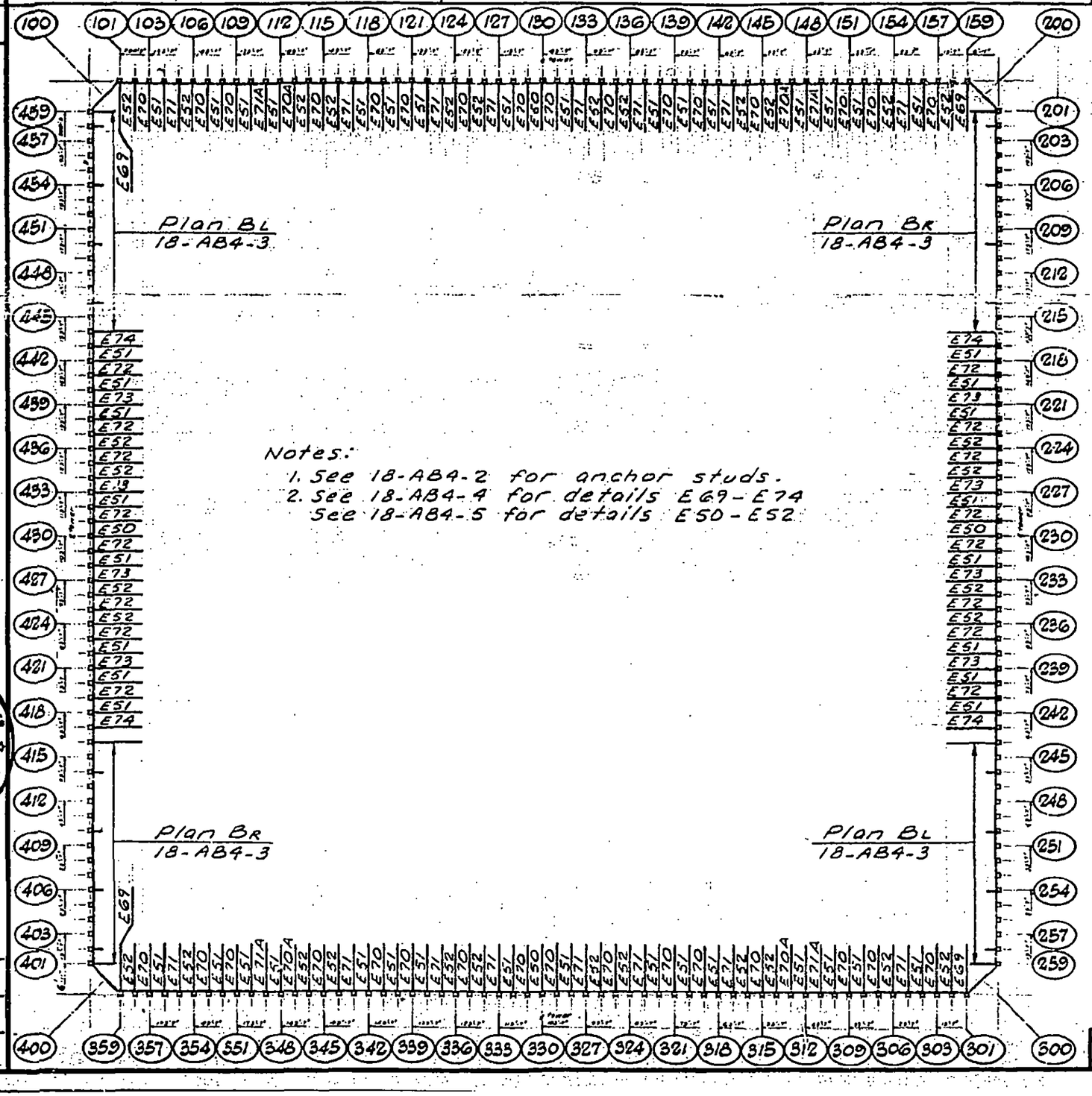

Notes:
1. See 18-AB4-2 for anchor studs.
2. See 18-AB4-4 for details E69-E74
   See 18-AB4-5 for details E50-E52

LICENSED PROFESSIONAL ENGINEER
LESLIE E. ROBERTSON
No. 34360
UNIVERSITY OF THE STATE OF NEW YORK

DESIGNED: S. Karp
DRAWN: A Franqui
REVIEWED: W. Brewer

18-AB3-5

SKILLING, HELLE, CHRISTIANSEN, ROBERTSON — Structural & Civil Engineers

PROJECT: THE WORLD TRADE CENTER

TITLE: ANCHOR PLATE KEY PLAN FLOORS 41, 75

DATE: 2-7-69

REVISIONS

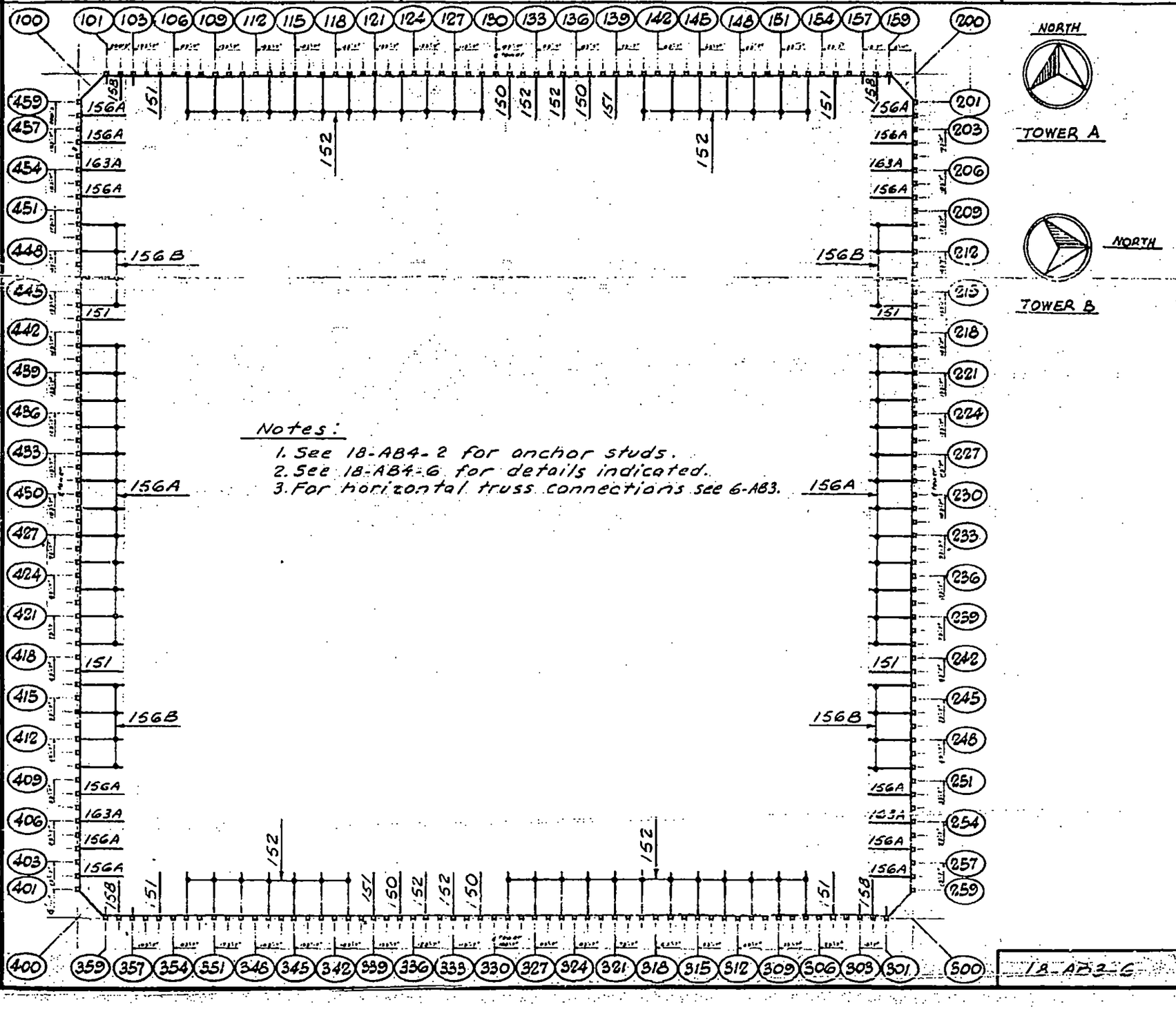

Notes:

1. See 18-AB4-2 for anchor studs.
2. See 18-AB4-6 for details indicated.
3. For horizontal truss connections see 6-AB3.

LICENSED PROFESSIONAL ENGINEER — LESLIE E. ROBERTSON — No. 34360 — UNIVERSITY OF THE STATE OF NEW YORK

DESIGNED: S. Kirp

DRAWN: A. Fronqui

REVISED: W. Brewer

18-AB2-C

SKILLING, HELLE, CHRISTIANSEN, ROBERTSON — Structural & Civil Engineers

PROJECT: THE WORLD TRADE CENTER

TITLE: ANCHOR PLATE KEY PLAN FLOOR 43 TOWER A

DATE: 2-7-69

REVISIONS

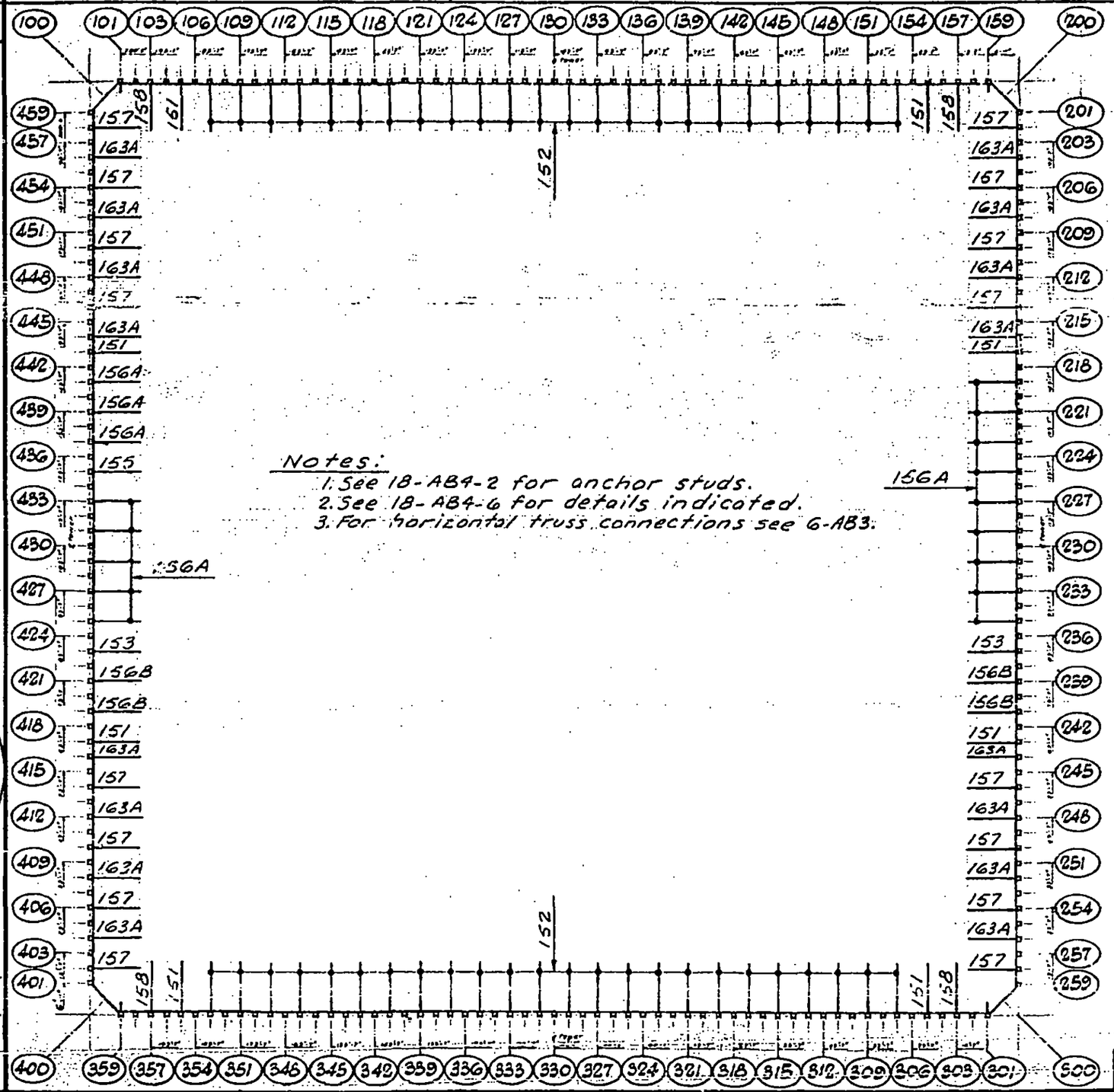

Notes:
1. See 18-AB4-2 for anchor studs.
2. See 18-AB4-6 for details indicated.
3. For horizontal truss connections see 6-AB3.

NORTH

TOWER A

LICENSED PROFESSIONAL ENGINEER
LESLIE E. ROBERTSON
No. 34360
UNIVERSITY OF THE STATE OF NEW YORK

DESIGNED: S. Korp

DRAWN: A. Fronqui

REVIEWED: W. Brewer

18-A3-7.1

SKILLING, HELLE, CHRISTIANSEN, ROBERTSON — Structural & Civil Engineers

PROJECT: THE WORLD TRADE CENTER

TITLE: ANCHOR PLATE KEY PLAN FLOOR 43 TOWER B

DATE: 2-7-69

REVISIONS

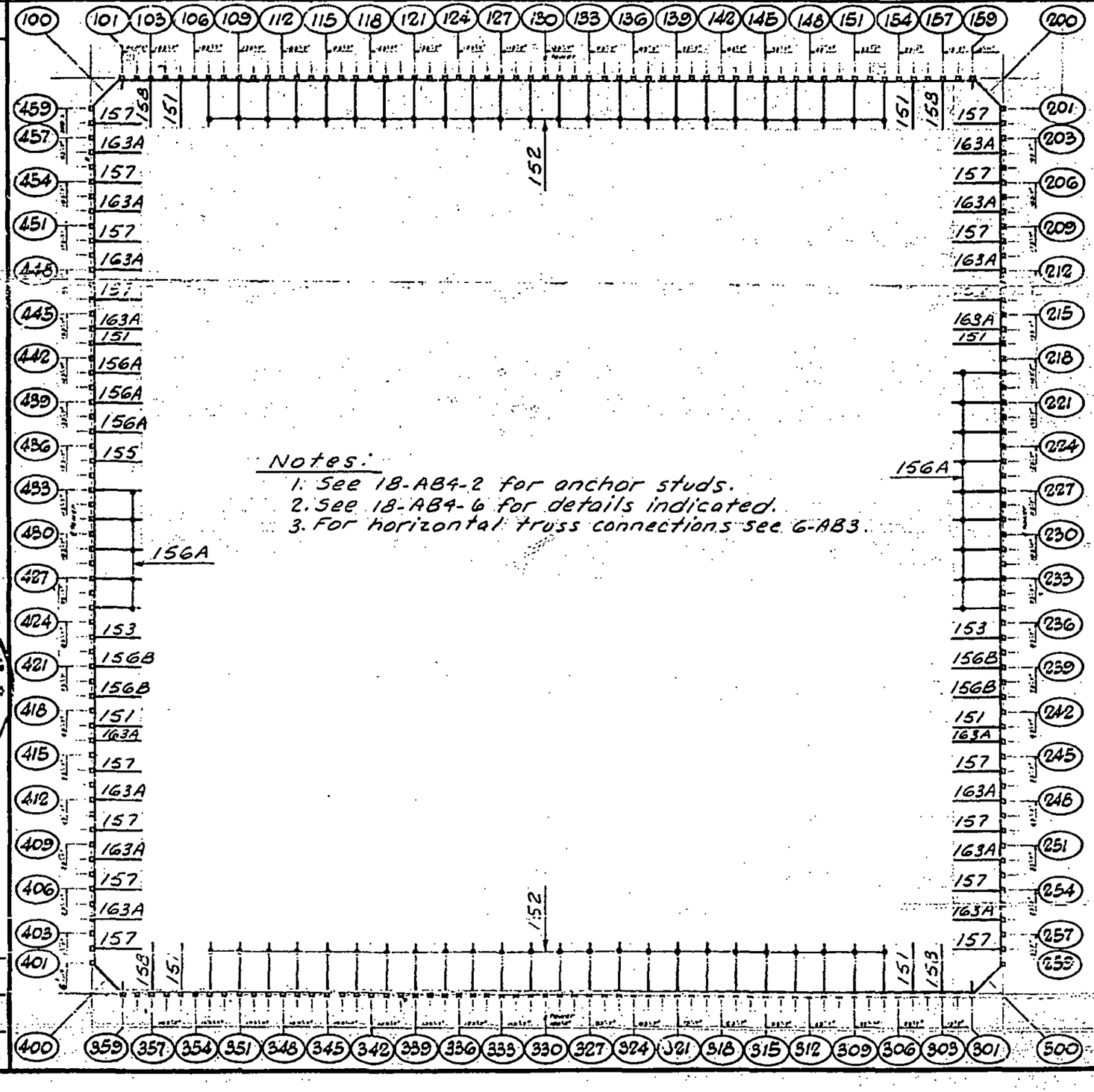

Notes:
1. See 18-AB4-2 for anchor studs.
2. See 18-AB4-6 for details indicated.
3. For horizontal truss connections see 6-AB3.

LICENSED PROFESSIONAL ENGINEER — LESLIE E. ROBERTSON — No. 34360 — STATE OF NEW YORK

DESIGNED: S. Karp

DRAWN: A. Fronqui

REVIEWED: L.E. Robertson

18-B3-7.2

SKILLING, HELLE, CHRISTIANSEN, ROBERTSON — Structural & Civil Engineers

PROJECT: THE WORLD TRADE CENTER

TITLE: ANCHOR PLATE KEY PLAN FLOOR 44 TOWER A

DATE: 2-7-69

REVISIONS

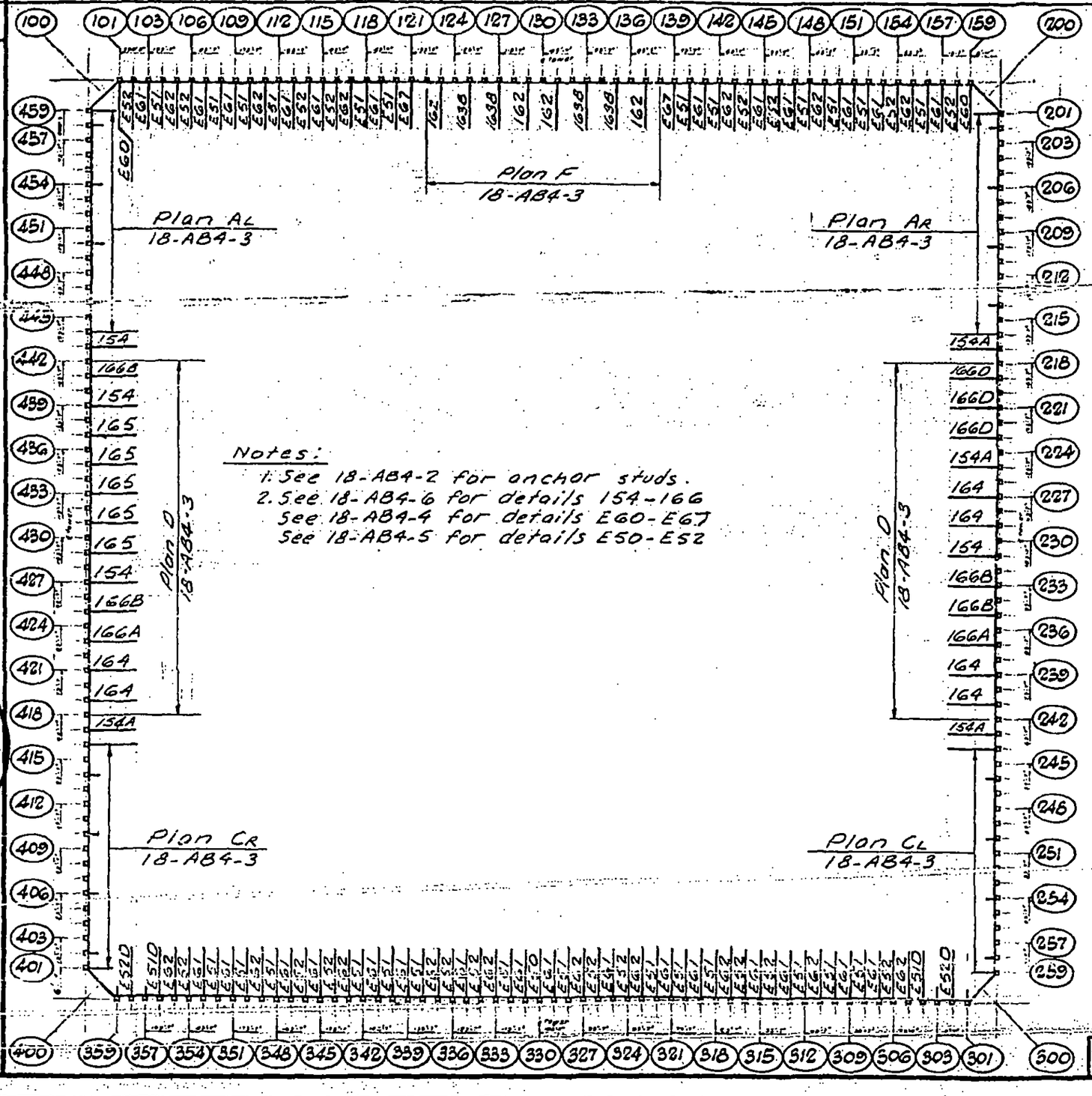

Notes:

1. See 18-AB4-2 for anchor studs.
2. See 18-AB4-6 for details 154-166
   See 18-AB4-4 for details E60-E67
   See 18-AB4-5 for details E50-E52

LICENSED PROFESSIONAL ENGINEER — LESLIE E. ROBERTSON — No. 34360 — UNIVERSITY OF THE STATE OF NEW YORK

DESIGNED S Karp

DRAWN A. Franqui

REVIEWED [illegible] Brewer

18-A3-8.1

SKILLING, HELLE, CHRISTIANSEN, ROBERTSON — Structural & Civil Engineers

PROJECT: THE WORLD TRADE CENTER

TITLE: ANCHOR PLATE KEY PLAN FLOOR 44 TOWER B.

DATE: 2-7-69.

REVISIONS

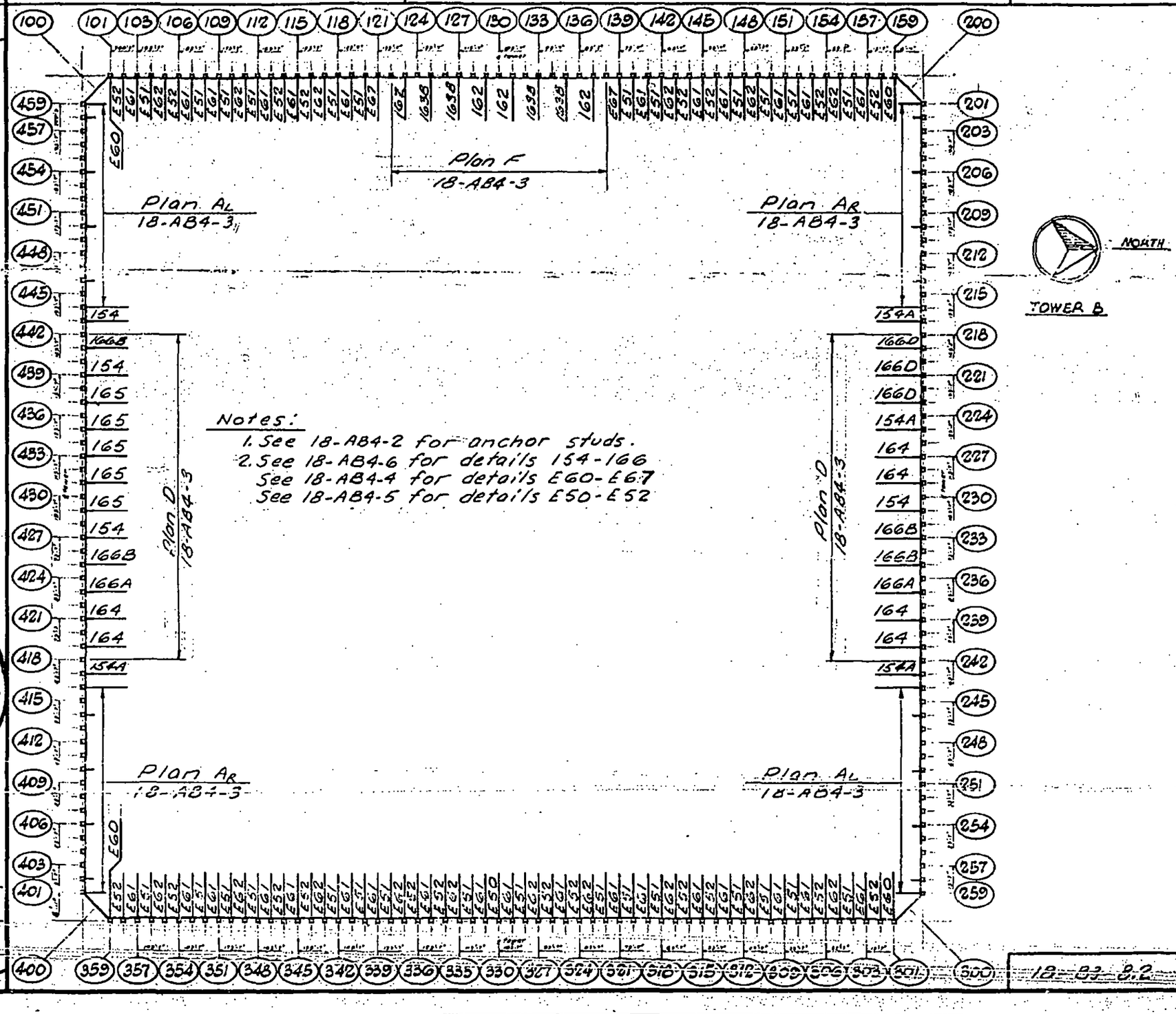

Notes:

1. See 18-AB4-2 for anchor studs.
2. See 18-AB4-6 for details 154-166
   See 18-AB4-4 for details E60-E67
   See 18-AB4-5 for details E50-E52

LICENSED PROFESSIONAL ENGINEER
LESLIE E. ROBERTSON
No. 34360
UNIVERSITY OF THE STATE OF NEW YORK

DESIGNED S. Karp

DRAWN A. Franquli

REVIEWED C.W. Brewer

18-B3-8.2

SKILLING, HELLE, CHRISTIANSEN, ROBERTSON — Structural & Civil Engineers

PROJECT: THE WORLD TRADE CENTER | TITLE: ANCHOR PLATE KEY PLAN FLOOR 45 | DATE: 2-7-69

REVISIONS

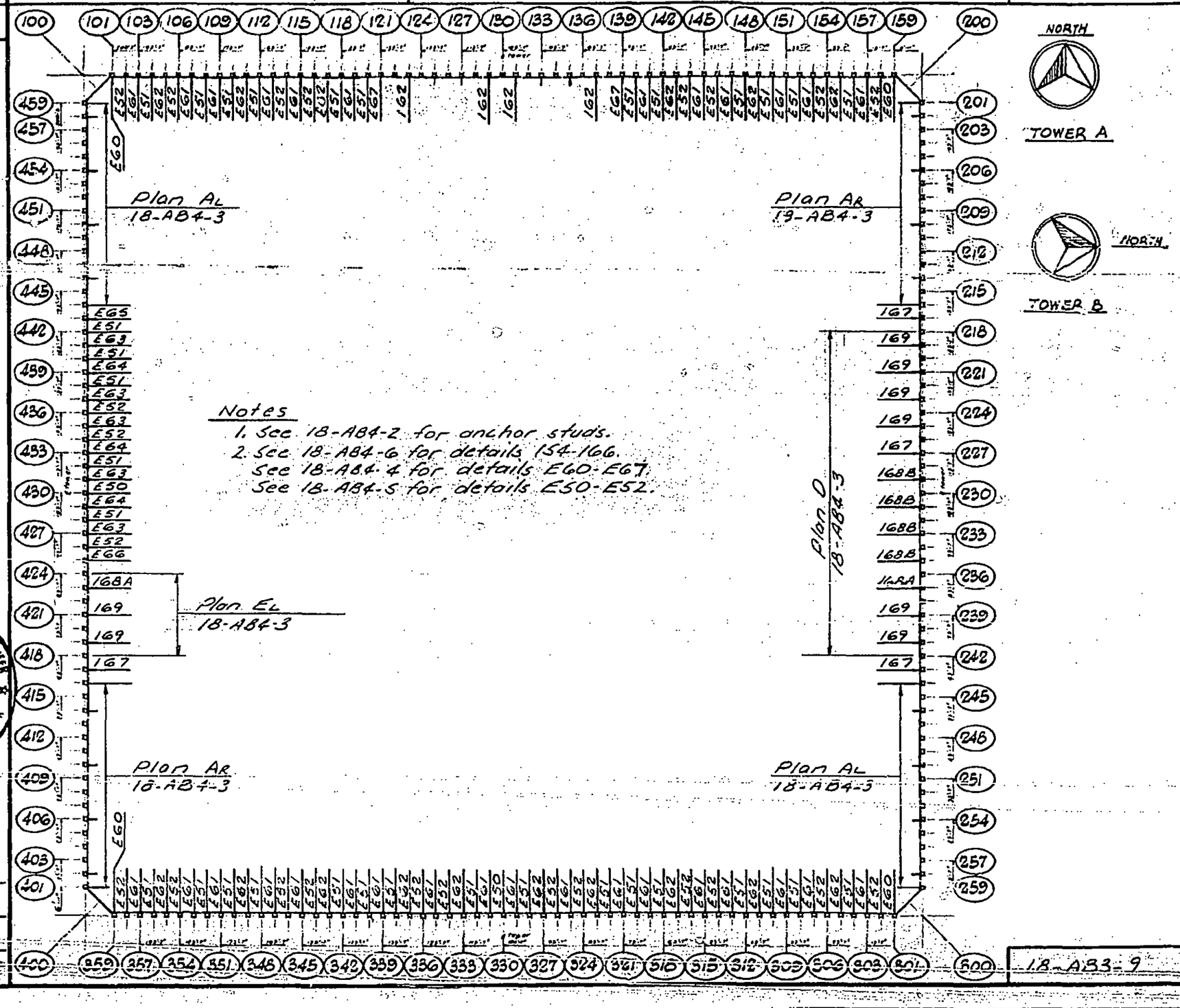

Notes

1. See 18-AB4-2 for anchor studs.
2. See 18-AB4-6 for details 154-166.
   See 18-AB4-4 for details E60-E67.
   See 18-AB4-5 for details E50-E52.

LICENSED PROFESSIONAL ENGINEER — LESLIE E. ROBERTSON — No. 34360 — UNIVERSITY OF THE STATE OF NEW YORK

DESIGNED S. Karp

DRAWN A. Franquil

REVIEWED W. Brewer

18-AB3-9

SKILLING, HELLE, CHRISTIANSEN, ROBERTSON — Structural & Civil Engineers

PROJECT: THE WORLD TRADE CENTER | TITLE: ANCHOR PLATE KEY PLAN FLOORS 46-49 | DATE: 2-7-69

REVISIONS

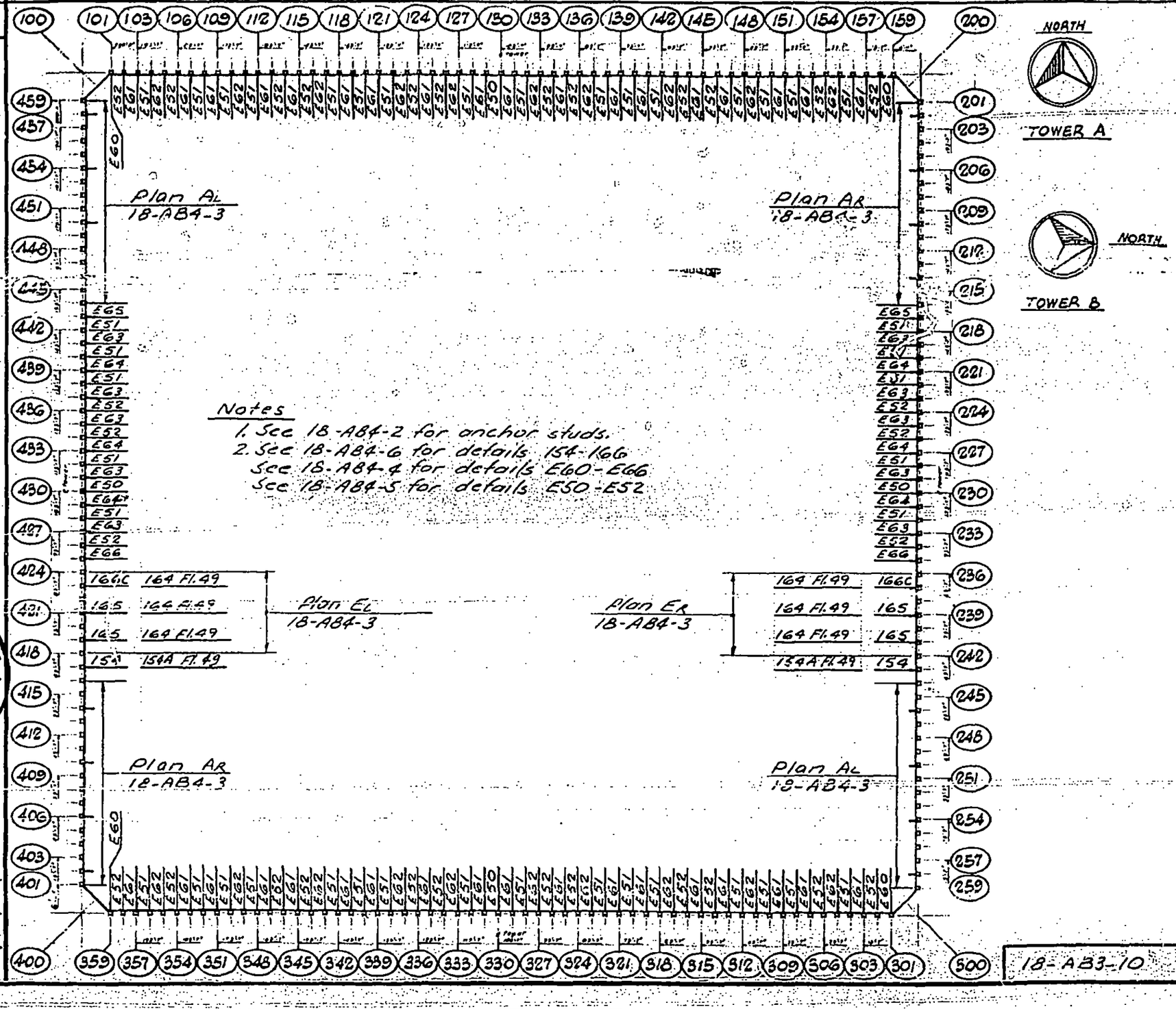

Notes

1. See 18-AB4-2 for anchor studs.
2. See 18-AB4-6 for details 154-166
   See 18-AB4-4 for details E60-E66
   See 18-AB4-5 for details E50-E52

LICENSED PROFESSIONAL ENGINEER — LESLIE E. ROBERTSON — No. 34360 — UNIVERSITY OF THE STATE OF NEW YORK

DESIGNED: J. Raup
DRAWN: A. Franqui
REVIEWED: W. Brewer

18-AB3-10

SKILLING, HELLE, CHRISTIANSEN, ROBERTSON — Structural & Civil Engineers

PROJECT: THE WORLD TRADE CENTER | TITLE: ANCHOR PLATE KEY PLAN FLOOR 77 | DATE: 2-7-69

REVISIONS

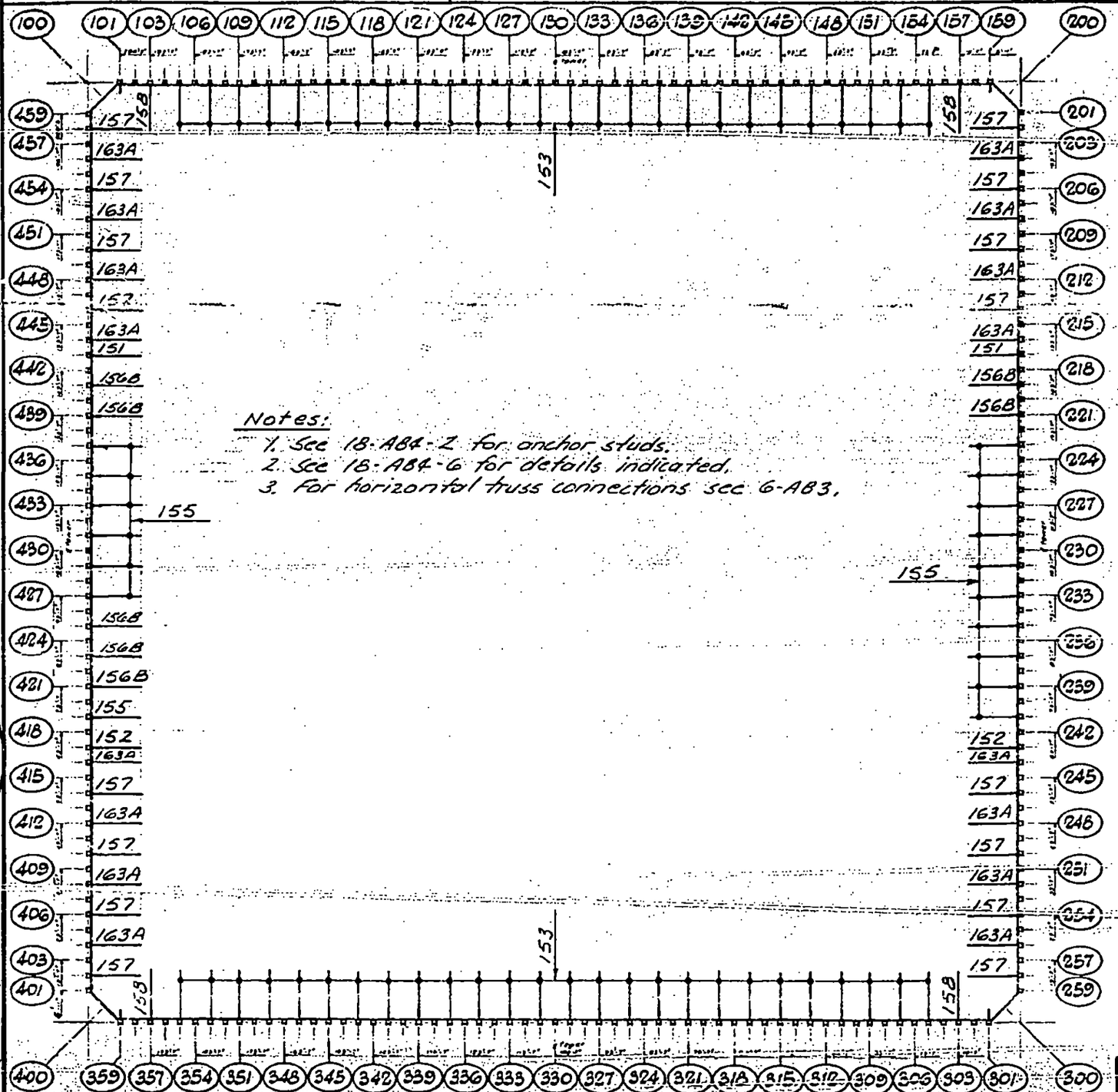

Notes:
1. See 18-AB4-2 for anchor studs.
2. See 18-AB4-6 for details indicated.
3. For horizontal truss connections see 6-AB3.

NORTH

TOWER A

NORTH

TOWER B

LICENSED PROFESSIONAL ENGINEER — LESLIE E. ROBERTSON — No. 34360 — UNIVERSITY OF THE STATE OF NEW YORK

DESIGNED S. Karp
DRAWN A. Franqui
REVIEWED W. Brewer

18-AB3-11

SKILLING, HELLE, CHRISTIANSEN, ROBERTSON — Structural & Civil Engineers

PROJECT: THE WORLD TRADE CENTER | TITLE: ANCHOR PLATE KEY PLAN. FLOOR 78. | DATE: 2-7-69

REVISIONS

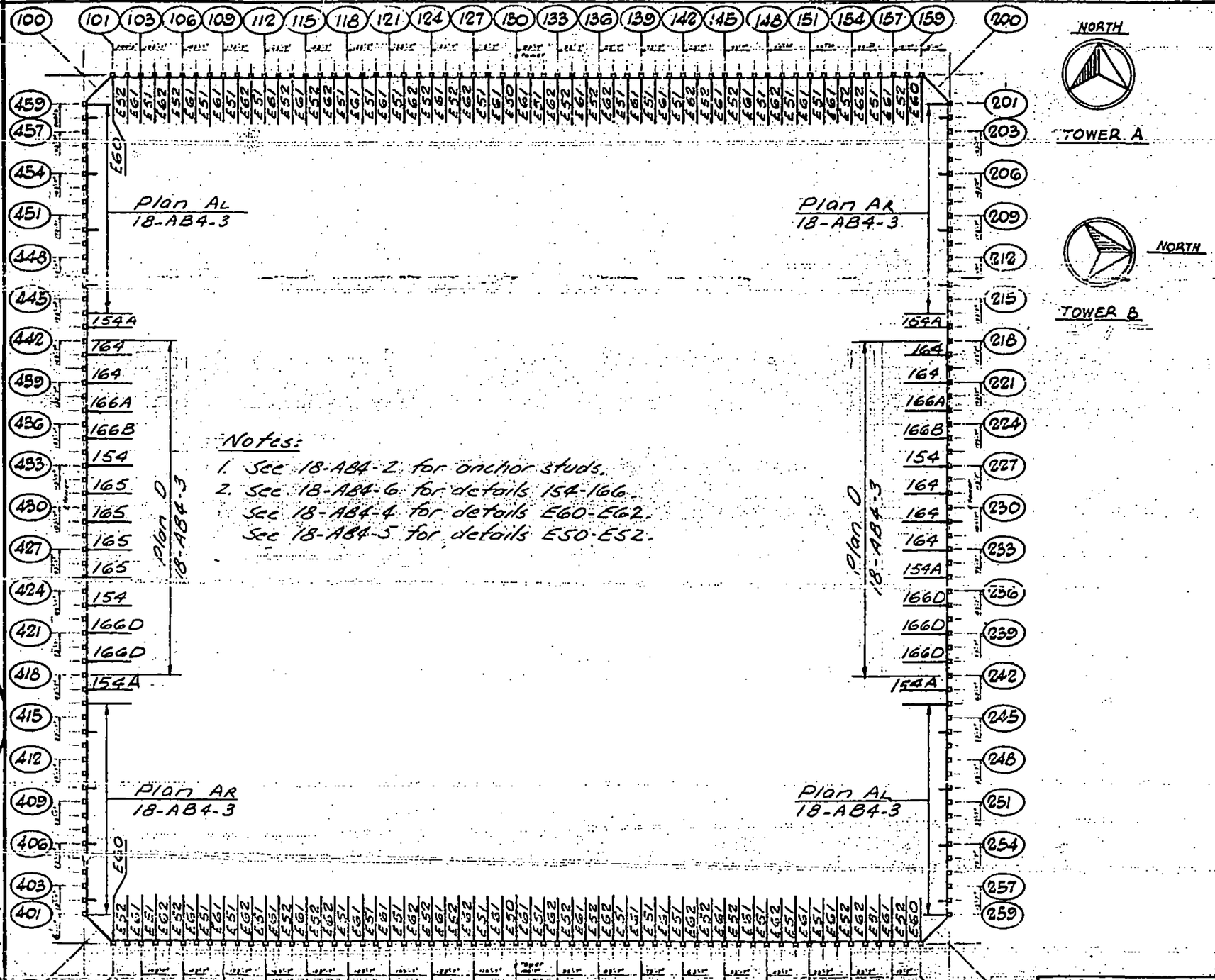

LICENSED PROFESSIONAL ENGINEER — LESLIE E. ROBERTSON — No. 34360 — UNIVERSITY OF THE STATE OF NEW YORK

DESIGNED: S. Karp

DRAWN: A. Franqui

REVIEWED: W. Brewer

18-AB3-12

SKILLING, HELLE, CHRISTIANSEN, ROBERTSON — Structural & Civil Engineers

PROJECT: THE WORLD TRADE CENTER

TITLE: ANCHOR PLATE KEY PLAN FLOOR 79

DATE: 2-7-69

REVISIONS

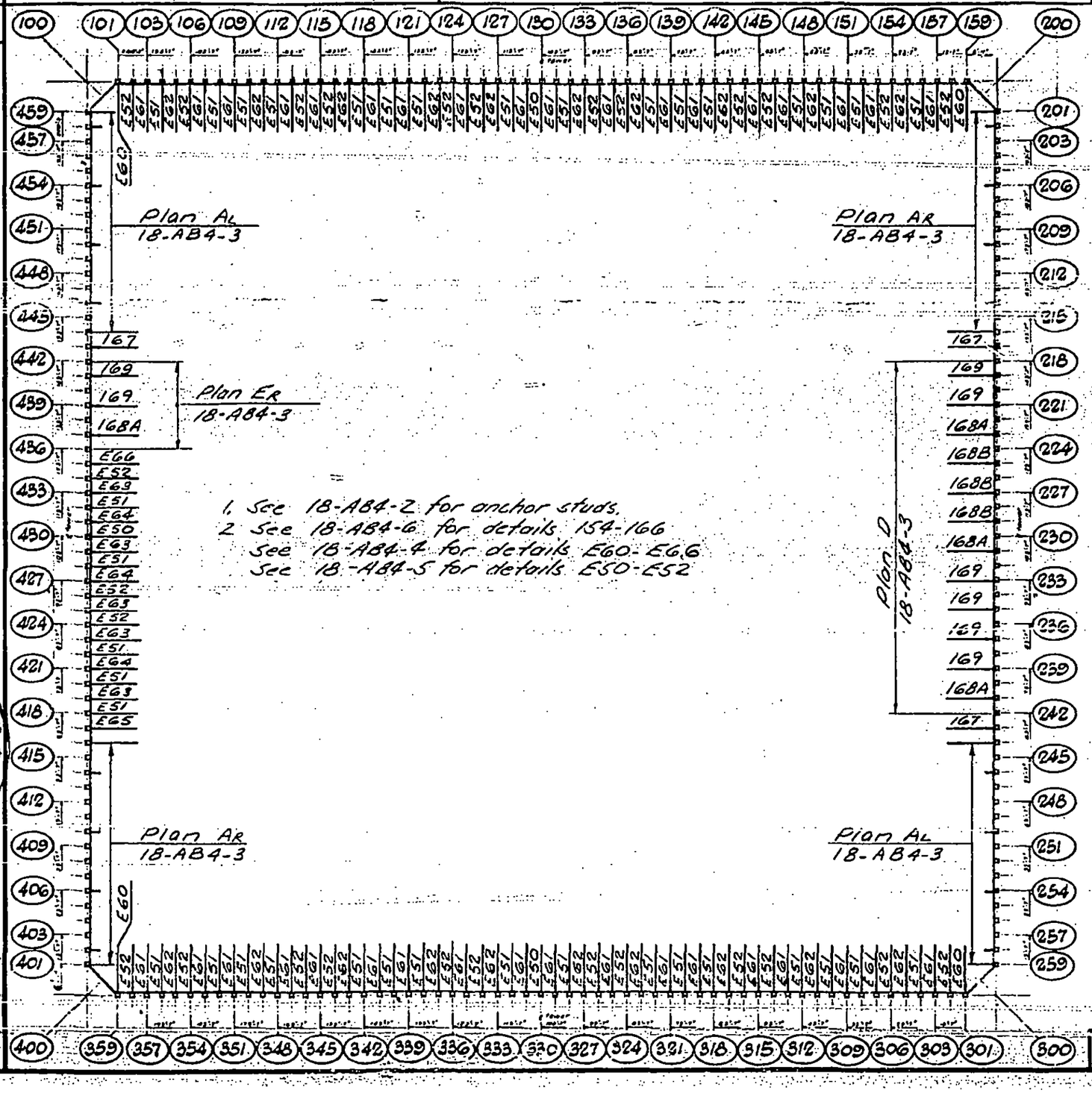

1. See 18-AB4-2 for anchor studs.
2. See 18-AB4-6 for details 154-166
   See 18-AB4-4 for details E60-E66
   See 18-AB4-5 for details E50-E52

NORTH

TOWER A

NORTH

TOWER B

LICENSED PROFESSIONAL ENGINEER
LESLIE E. ROBERTSON
No. 34360
UNIVERSITY OF THE STATE OF NEW YORK

DESIGNED S. Kalp

DRAWN A. Franqui

REVIEWED W. Brewer

18-AB3-13

SKILLING, HELLE, CHRISTIANSEN, ROBERTSON — Structural & Civil Engineers

PROJECT: THE WORLD TRADE CENTER

TITLE: ANCHOR PLATE KEY PLAN FLOORS 80-83

DATE: 2-7-69

REVISIONS

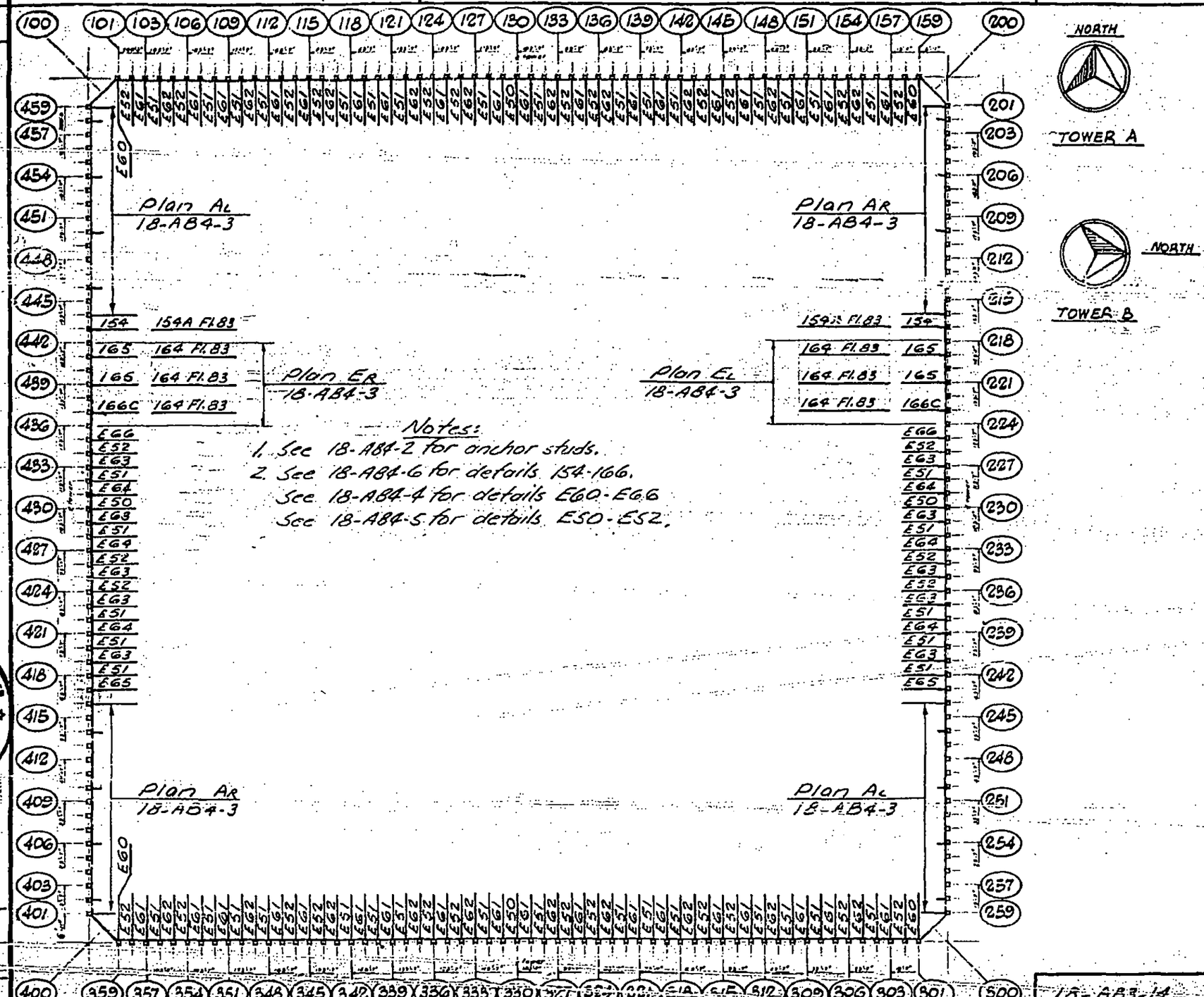

Notes:
1. See 18-AB4-2 for anchor studs.
2. See 18-AB4-6 for details 154-166.
See 18-AB4-4 for details E60-E66
See 18-AB4-5 for details E50-E52.

LICENSED PROFESSIONAL ENGINEER
LESLIE E. ROBERTSON
No. 34360
UNIVERSITY OF THE STATE OF NEW YORK

DESIGNED: S. Karp

DRAWN: A. [illegible]

REVIEWED: W. Brewer

18-AB3-14

SKILLING, HELLE, CHRISTIANSEN, ROBERTSON — Structural & Civil Engineers

PROJECT: THE WORLD TRADE CENTER | TITLE: ANCHOR DETAILS AT EXTERIOR WALL | DATE: 2-7-67

REVISIONS

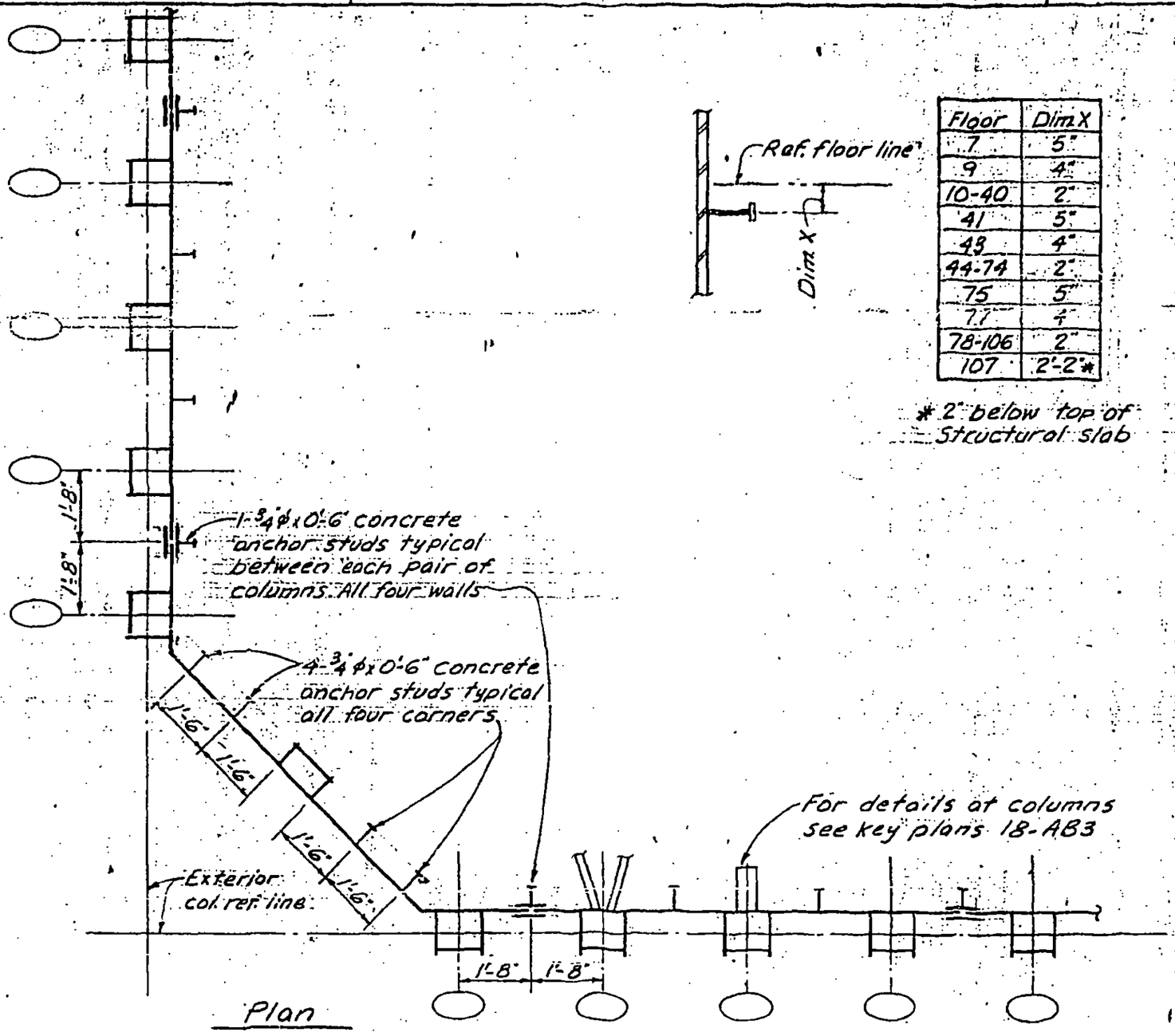

Plan

Floor	Dim X
7	5"
9	4"
10-40	2"
41	5"
43	4"
44-74	2"
75	5"
77	4"
78-106	2"
107	2'-2"*

* 2" below top of structural slab

TYPICAL ARRANGEMENT OF ANCHOR DETAILS AT EXTERIOR WALL OF BUILDING
For floors covered see Schedule

18-AB4.2.1

LICENSED PROFESSIONAL ENGINEER — LESLIE E. ROBERTSON — No. 34360 — UNIVERSITY OF THE STATE OF NEW YORK

DESIGNED: S. Karp
DRAWN: A. FRANQUI
REVIEWED: W. Brewer

SKILLING, HELLE, CHRISTIANSEN, ROBERTSON — Structural & Civil Engineers

PROJECT: THE WORLD TRADE CENTER | TITLE: ANCHOR DETAILS AT EXTERIOR WALL | DATE: 2-7-69

REVISIONS

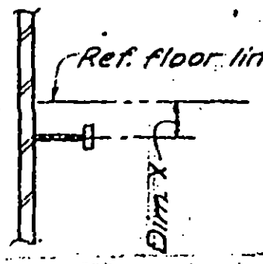

Floor	Dim. X
108	6"
110	2"

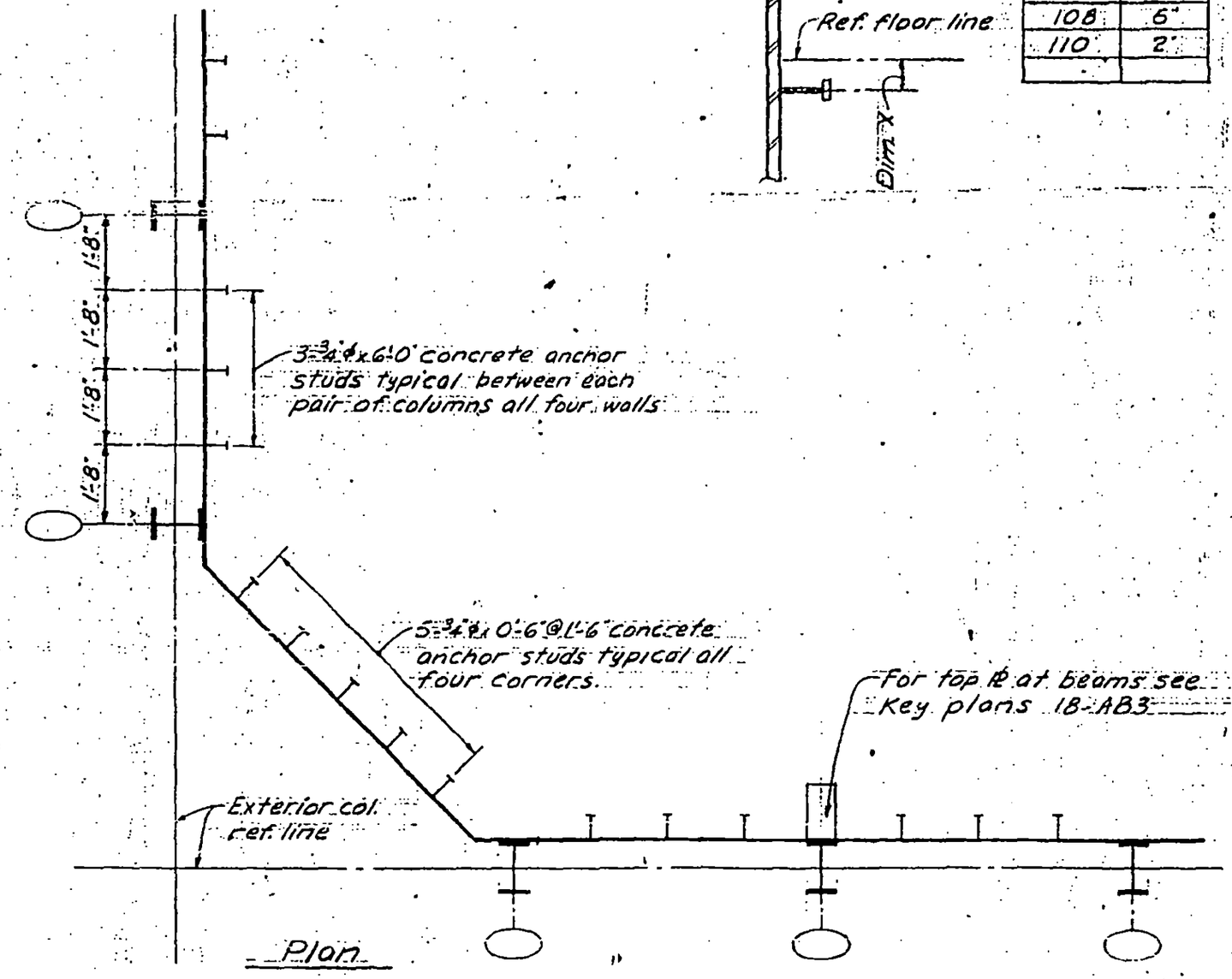

TYPICAL ARRANGEMENT OF ANCHOR DETAILS AT EXTERIOR WALL OF BUILDING

For floors covered see schedule

18-AB4.2.2

LICENSED PROFESSIONAL ENGINEER — LESLIE E. ROBERTSON — No. 34960 — UNIVERSITY OF THE STATE OF NEW YORK

SIGNED S. Karp

DRAWN A. FRANQUI

REVIEWED W. Brewer

SKILLING, HELLE, CHRISTIANSEN, ROBERTSON — Structural & Civil Engineers

PROJECT: THE WORLD TRADE CENTER | TITLE: ANCHOR DETAILS - EXTERIOR WALL DETAIL PLANS A & B | DATE: 2-7-69

REVISIONS

See 18-A84-5 for details indicated.

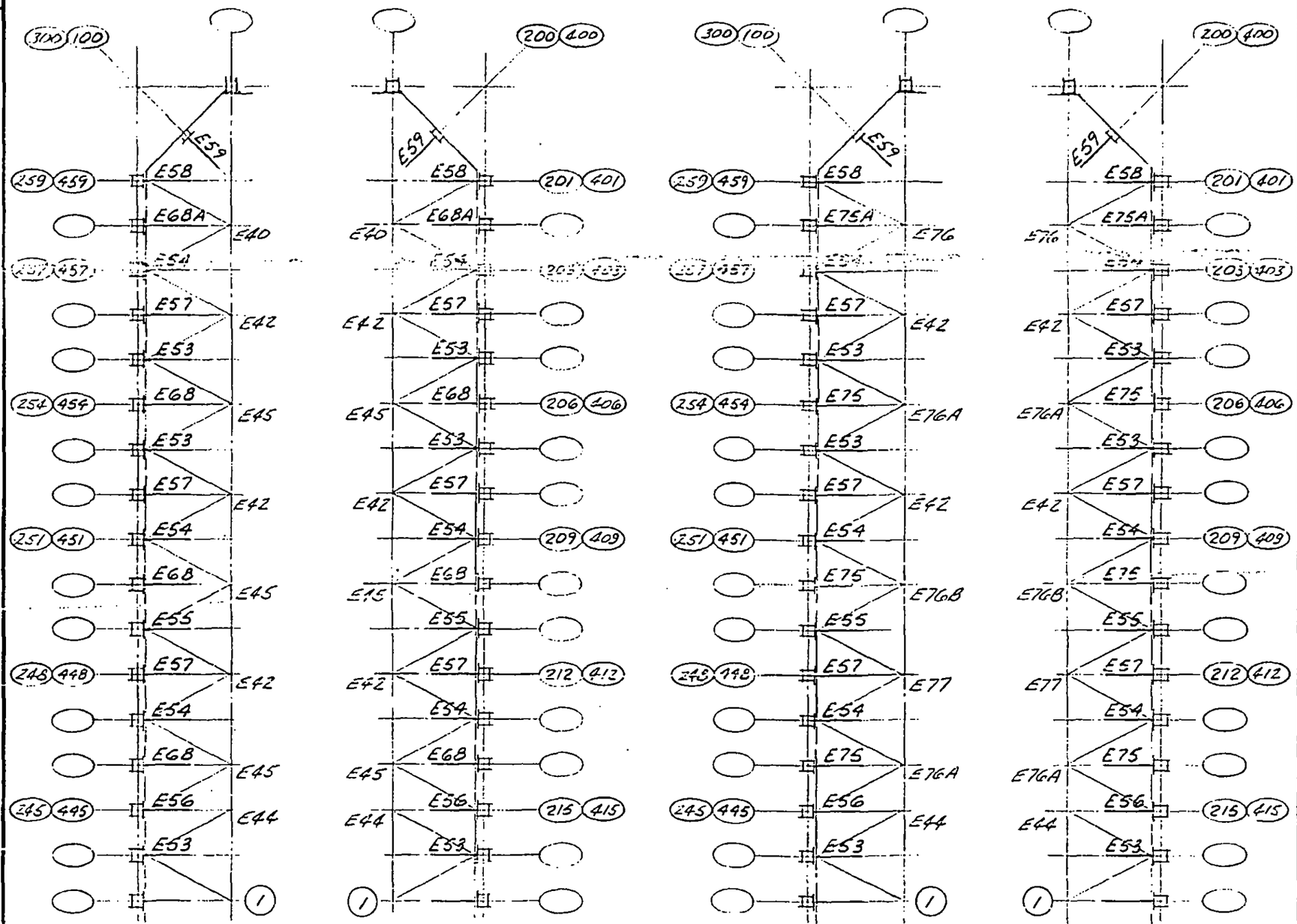

Plan AL — Plan AR — Plan BL — Plan BR

Note (1) E83 except where Plan D or E are adjacent use Detail E82.

LICENSED PROFESSIONAL ENGINEER
LESLIE E. ROBERTSON
No. 34360
UNIVERSITY OF THE STATE OF NEW YORK

DESIGNED S. Karp
DRAWN J. Adams
REVIEWED W. Brewer

18-A84-3.1

SKILLING, HELLE, CHRISTIANSEN, ROBERTSON — Structural & Civil Engineers

PROJECT: THE WORLD TRADE CENTER | TITLE: ANCHOR DETAILS - EXTERIOR WALL DETAIL PLAN C | DATE: 2-7-69

REVISIONS

See 18-AB4-5 for details indicated

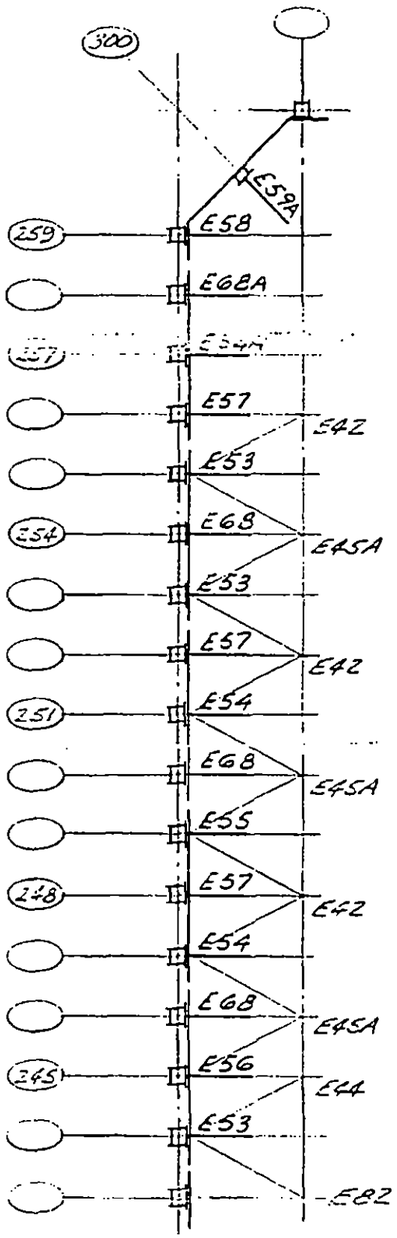

Plan CL

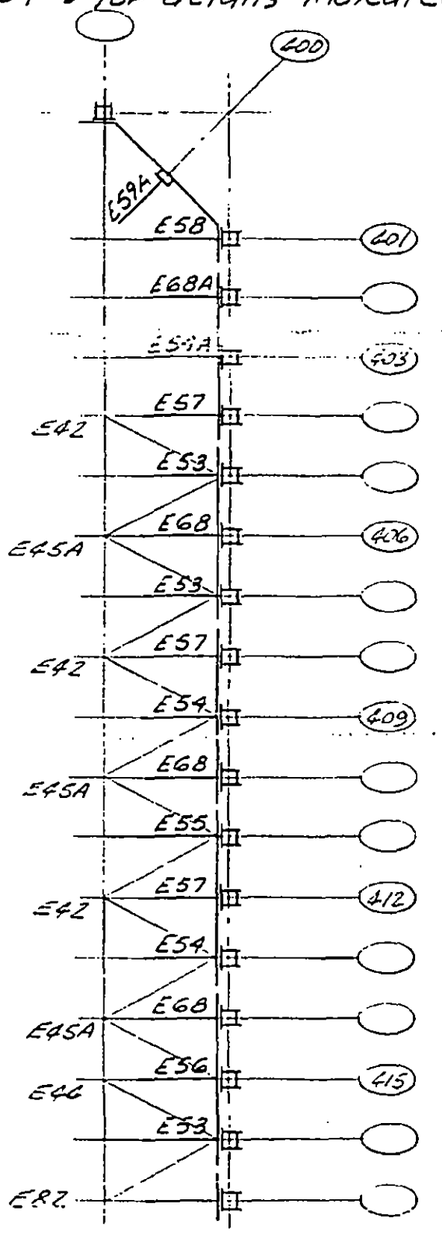

Plan CR

DESIGNED S. Karp
DRAWN J. Adams
REVIEWED W. Brewer

LICENSED PROFESSIONAL ENGINEER — LESLIE E. ROBERTSON — No 34360 — UNIVERSITY OF THE STATE OF NEW YORK

18-AB4-3.2

SKILLING, HELLE, CHRISTIANSEN, ROBERTSON — Structural & Civil Engineers

PROJECT: THE WORLD TRADE CENTER | TITLE: ANCHOR DETAILS-EXTERIOR WALL DETAIL PLANS D,E,F | DATE: 2-7-69

REVISIONS

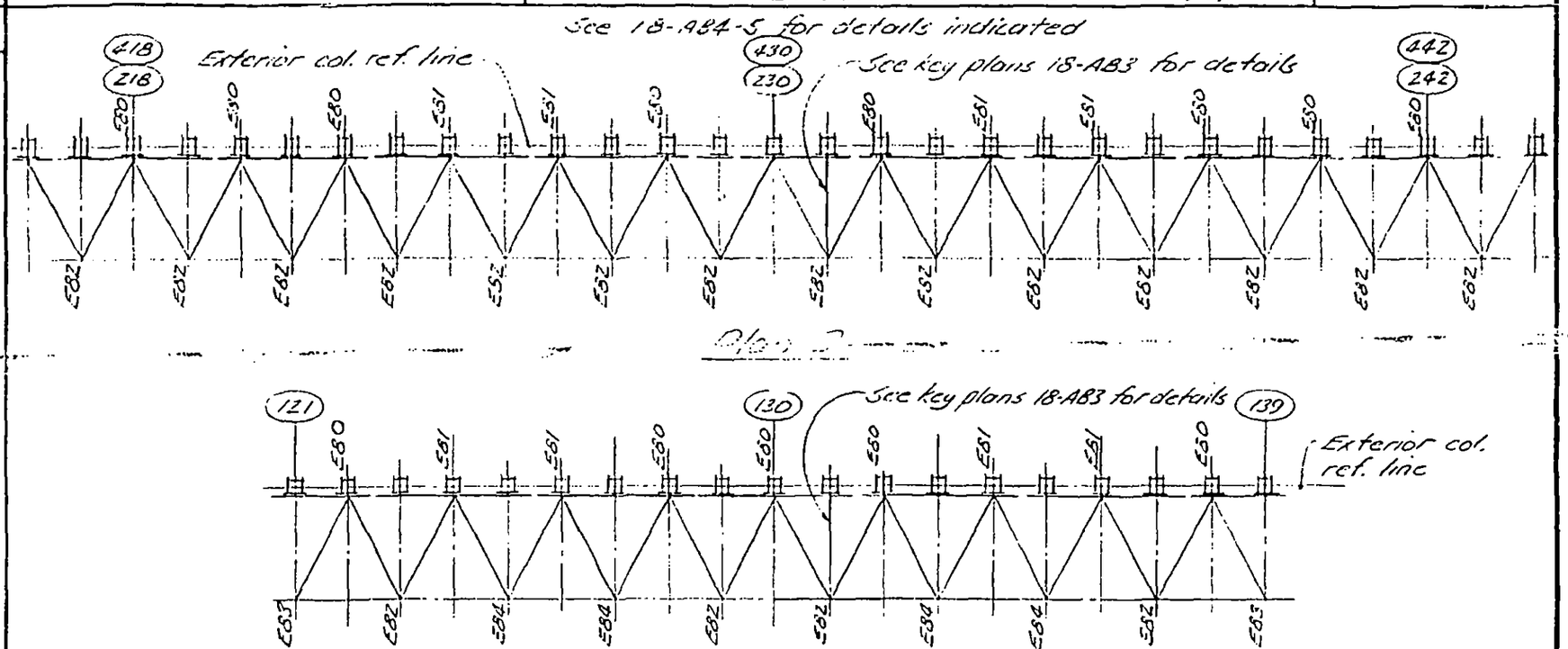

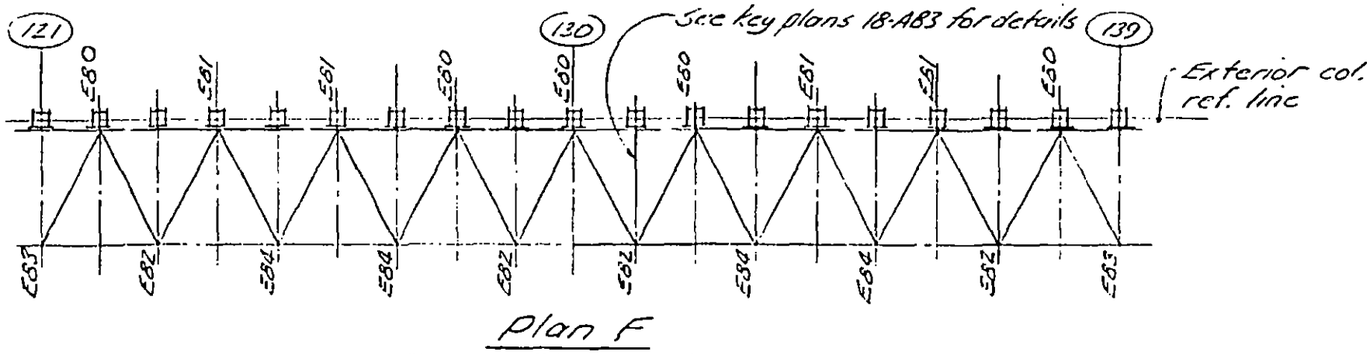

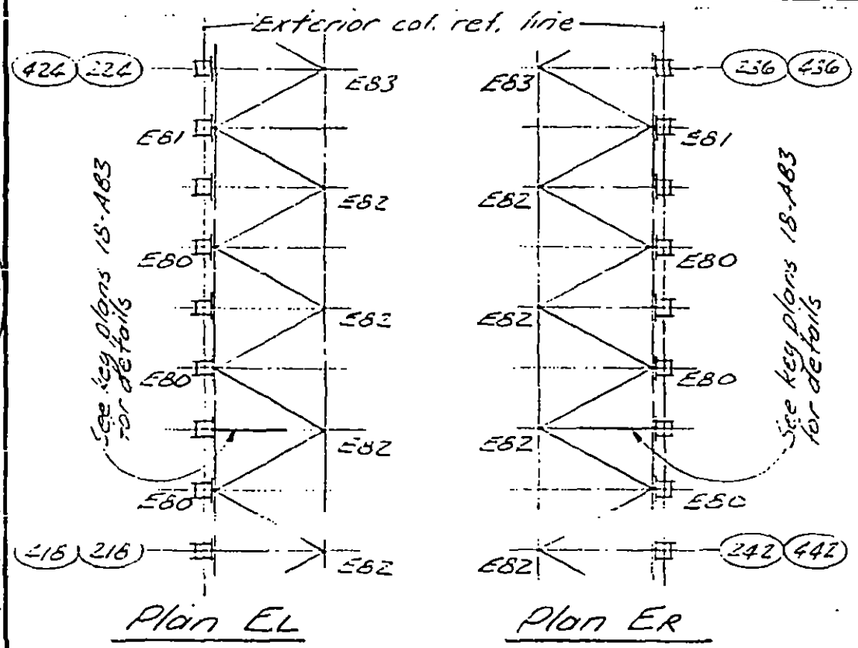

LICENSED PROFESSIONAL ENGINEER
LESLIE E. ROBERTSON
No. 34380
UNIVERSITY OF THE STATE OF NEW YORK

DESIGNED J. Kamp
DRAWN J. Adams
REVIEWED W. Brewer

18-AB4-3.3

SKILLING, HELLE, CHRISTIANSEN, ROBERTSON — Structural & Civil Engineers

PROJECT THE WORLD TRADE CENTER | TITLE DETAILS E61 - E67 | DATE 2-7-69

REVISIONS

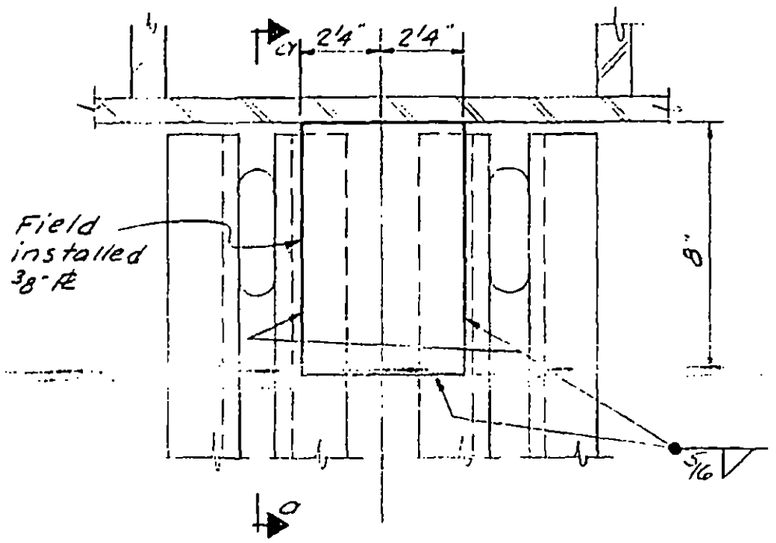

Detail E61, E62, E65, E67

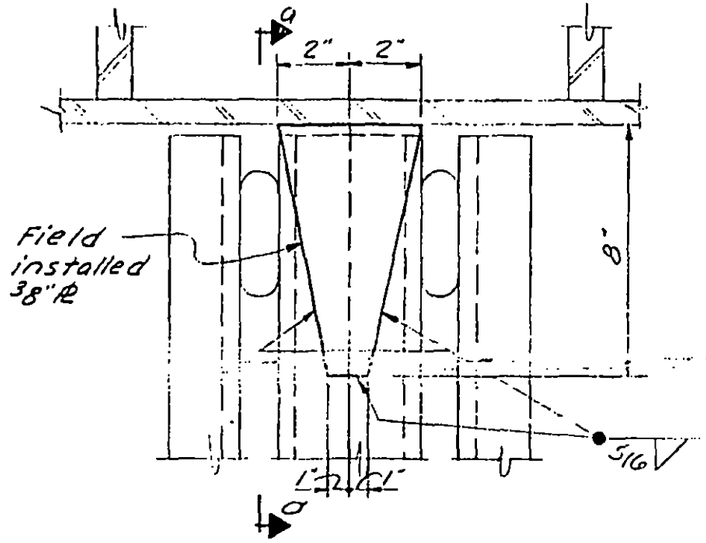

Detail E63, E64, E66

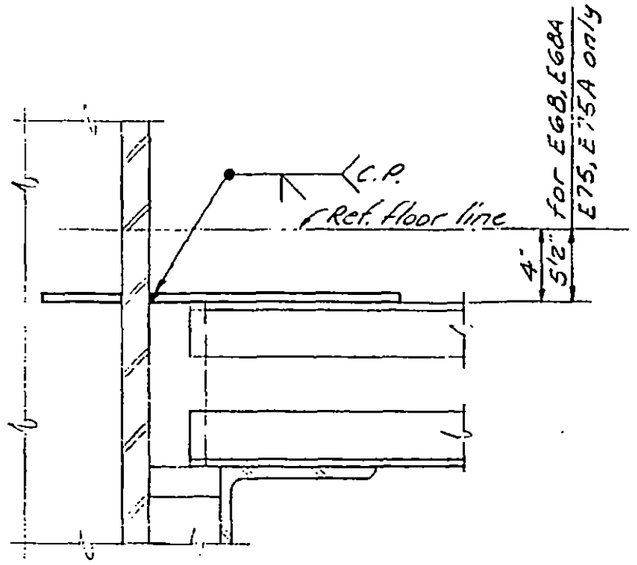

Section a-a

LICENSED PROFESSIONAL ENGINEER
LESLIE E. ROBERTSON
No. 34360
UNIVERSITY OF THE STATE OF NEW YORK

DESIGNED S. Karp
DRAWN J. Adams
REVIEWED W. Brewer

18-A84-4.1

SKILLING, HELLE, CHRISTIANSEN, ROBERTSON — Structural & Civil Engineers

PROJECT: THE WORLD TRADE CENTER | TITLE: DETAILS E60, E69 | DATE: 2-7-69

REVISIONS

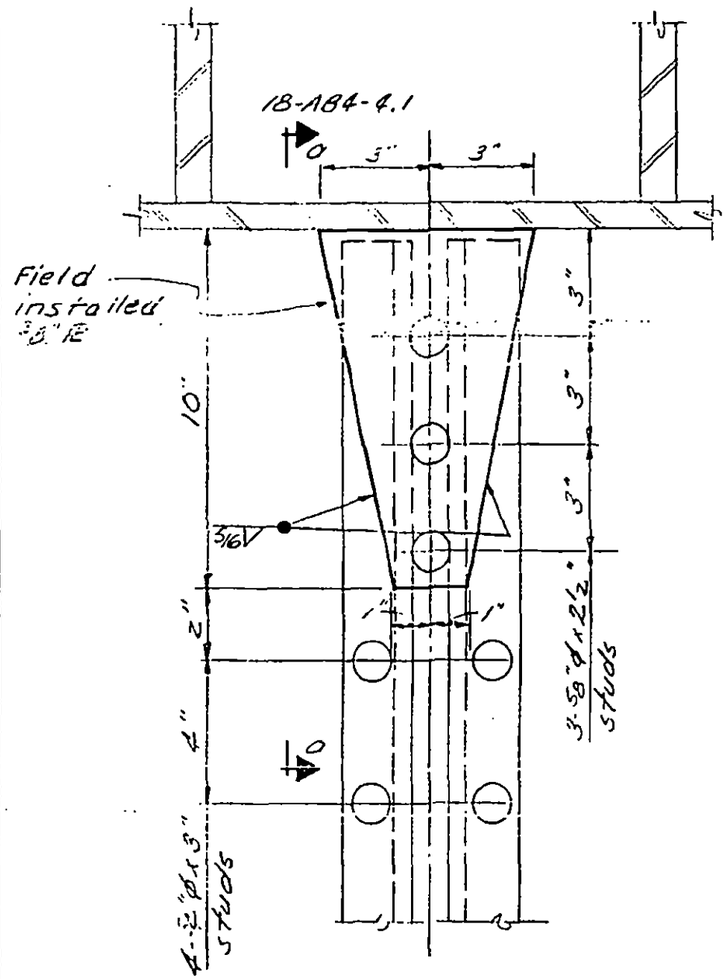

E60

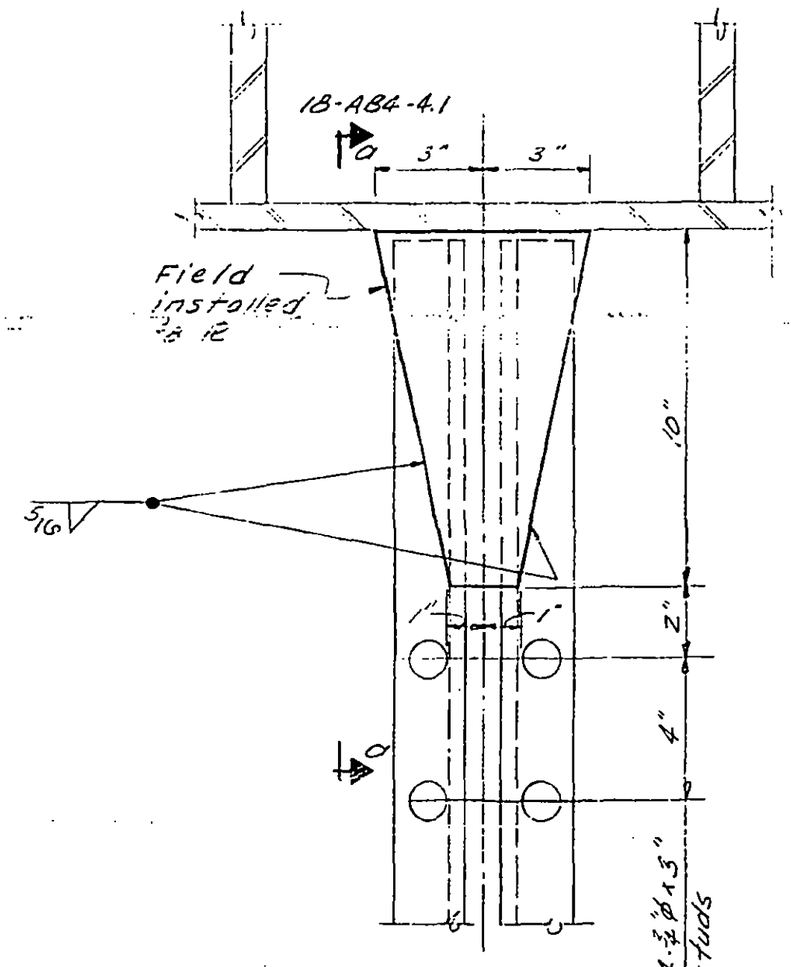

E69

LICENSED PROFESSIONAL ENGINEER
LESLIE E. ROBERTSON
No. 34360
UNIVERSITY OF THE STATE OF NEW YORK

DESIGNED: S. Karp
DRAWN: J. Adams
REVIEWED: L.E. Robertson

1B-AB4-4.2

SKILLING, HELLE, CHRISTIANSEN, ROBERTSON — Structural & Civil Engineers

PROJECT: THE WORLD TRADE CENTER | TITLE: DETAILS E68 AND E68A | DATE: 2-7-69

REVISIONS

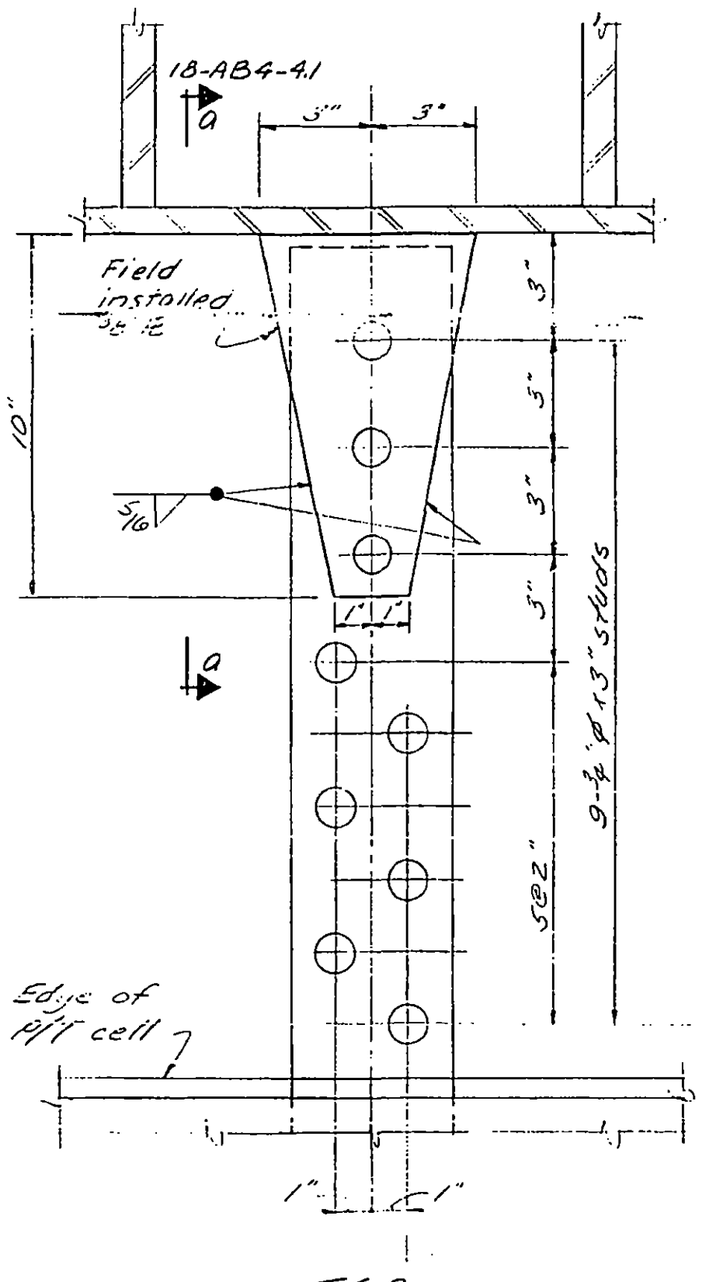

E68

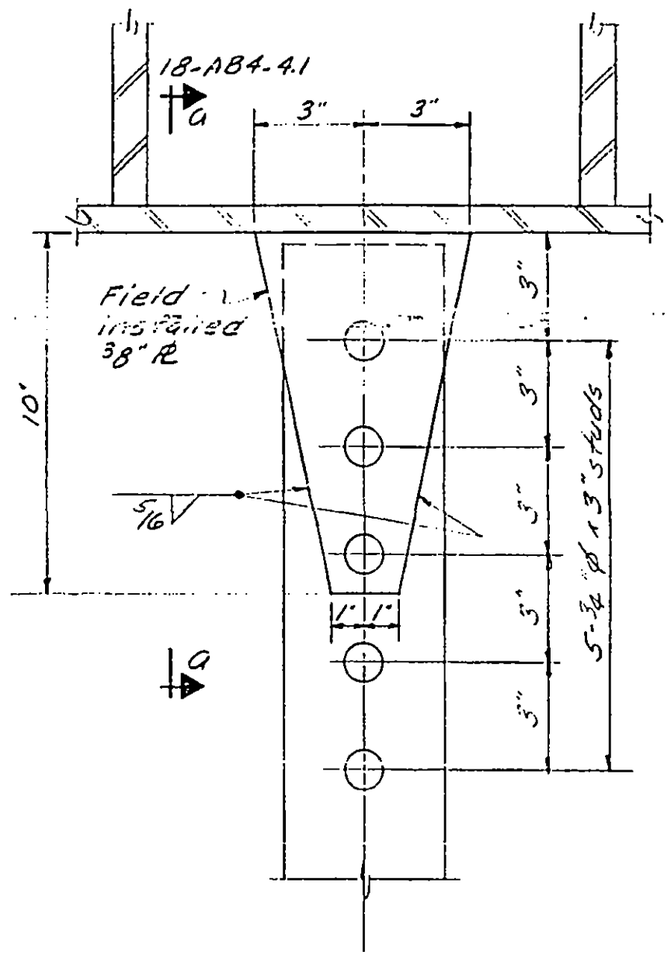

E68A

LICENSED PROFESSIONAL ENGINEER
LESLIE E. ROBERTSON
No. 34360
UNIVERSITY OF THE STATE OF NEW YORK

S. Karp
DRAWN
J. Adams
REVIEWED
W. [illegible]

18-AB4-4.3

SKILLING, HELLE, CHRISTIANSEN, ROBERTSON — Structural & Civil Engineers

PROJECT THE WORLD TRADE CENTER | TITLE DETAILS E70, E70A, E71, E71A, E74 | DATE 2-7-69

REVISIONS

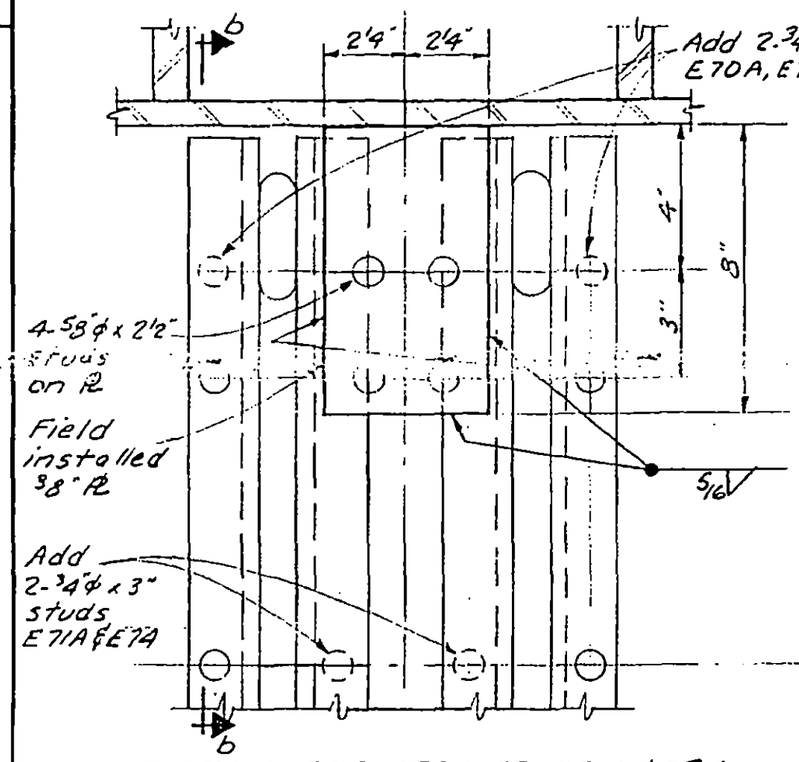

DETAIL E70, E70A, E71, E71A & E74

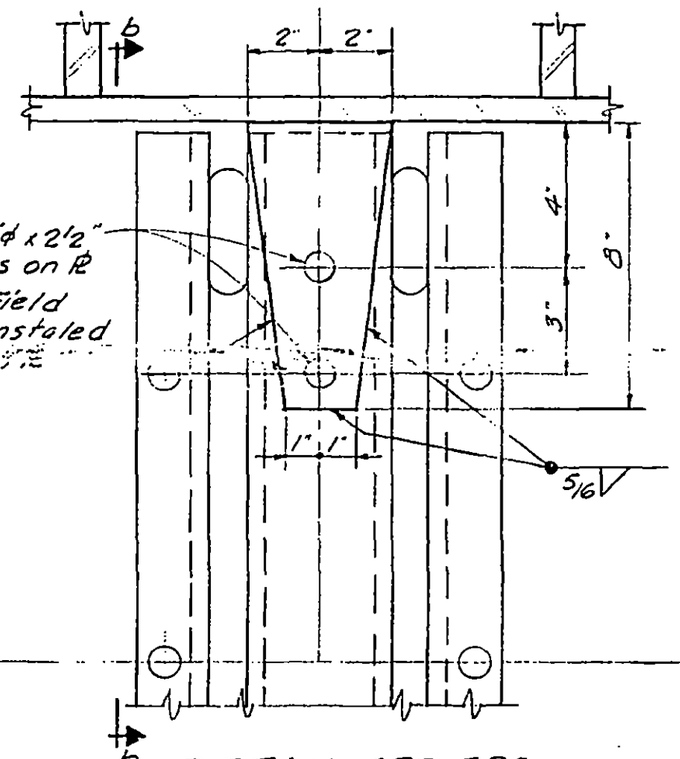

DETAIL E72, E73

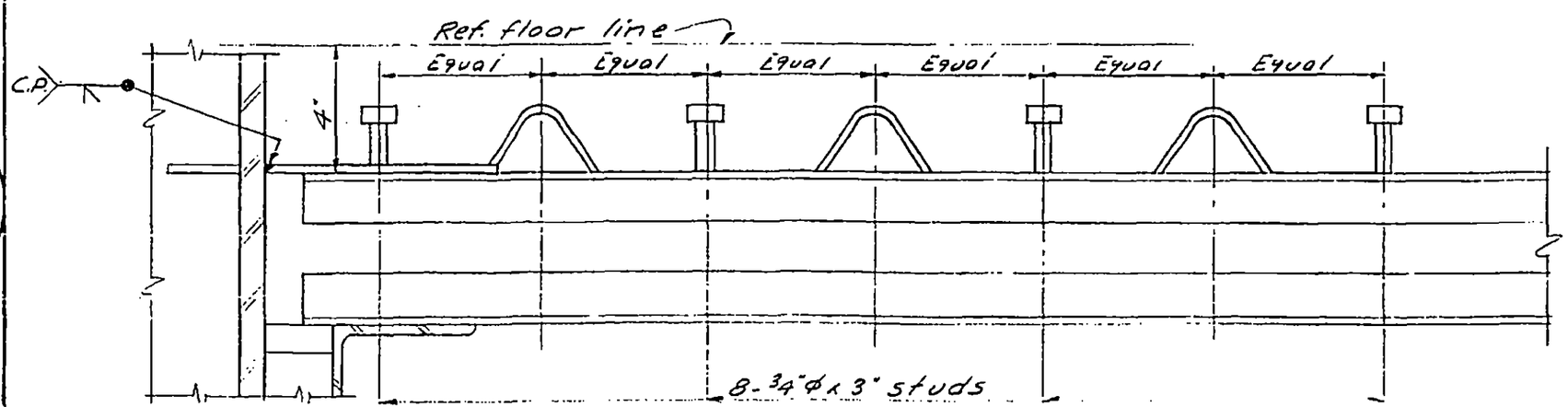

Section 6-b

LICENSED PROFESSIONAL ENGINEER
LESLIE E. ROBERTSON
No. 34360
UNIVERSITY OF THE STATE OF NEW YORK

DES. DWG. S. Kamp

DRAWN A. FRANQUI

REVIEWED W. Brewer

18-AB4-4.4

SKILLING, HELLE, CHRISTIANSEN, ROBERTSON — Structural & Civil Engineers

PROJECT: THE WORLD TRADE CENTER | TITLE: DETAILS E75 AND E75A | DATE: 2-7-69

REVISIONS

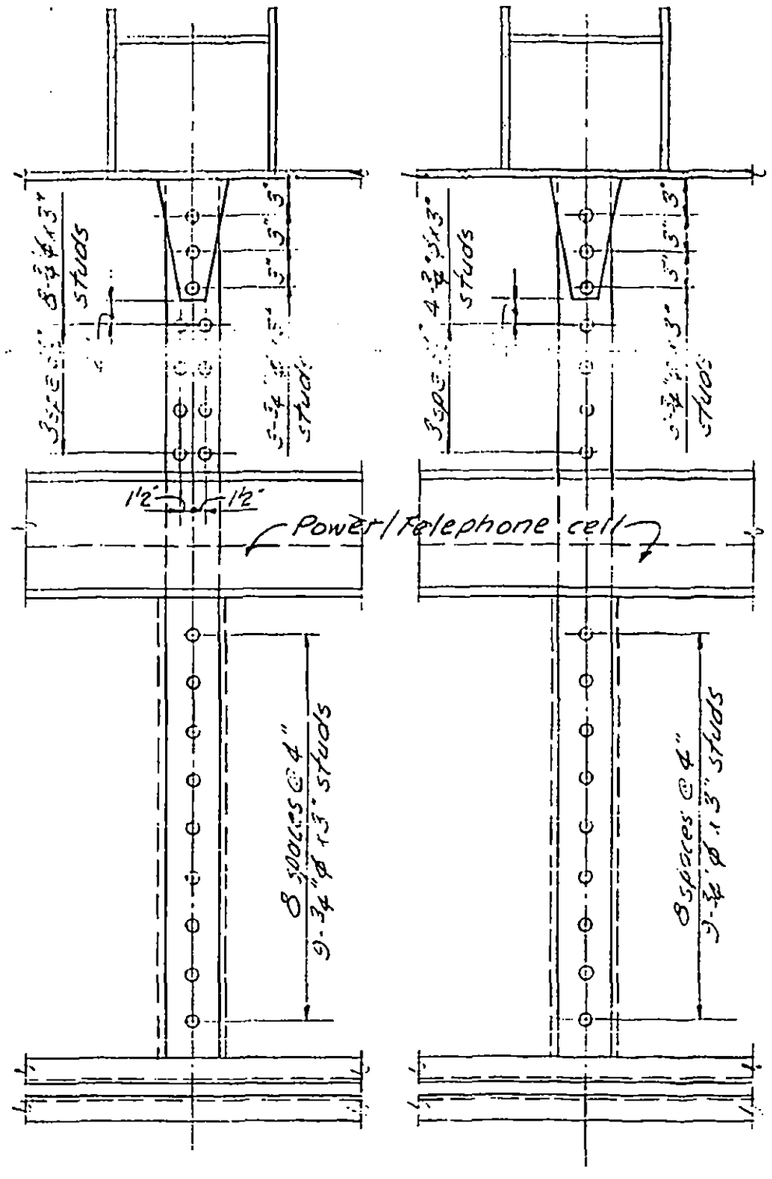

E75 E75A

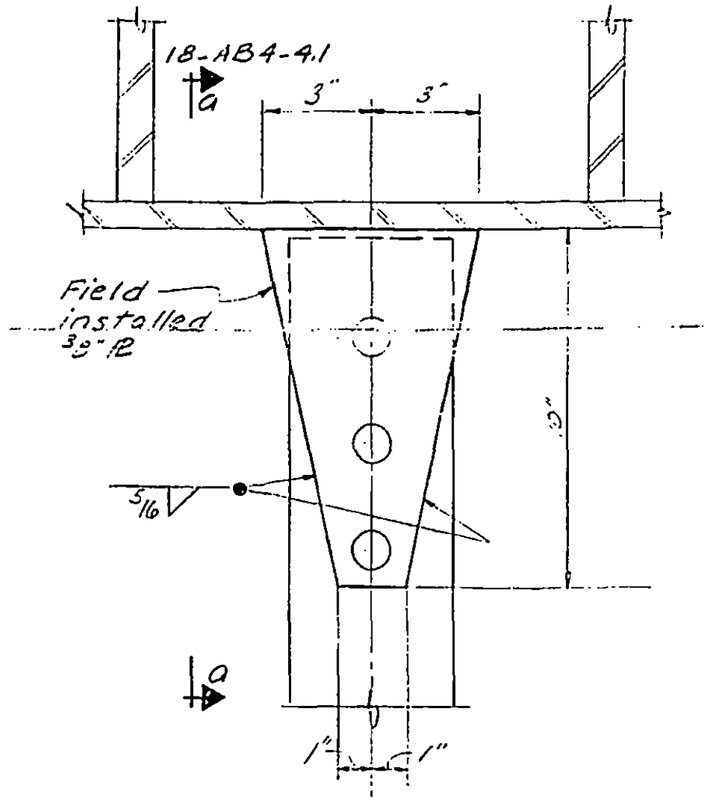

Detail E75, E75A

LICENSED PROFESSIONAL ENGINEER — LESLIE E. ROBERTSON — No. 34360 — UNIVERSITY OF THE STATE OF NEW YORK

DESIGNED S. Karp
DRAWN J. Adams
REVIEWED W. Brenner

18-AB4-4.5

SKILLING, HELLE, CHRISTIANSEN, ROBERTSON — Structural & Civil Engineers

PROJECT THE WORLD TRADE CENTER | TITLE DETAILS E50, E51, E52, E80, E81, E82, E83 | DATE 2-7-69

REVISIONS

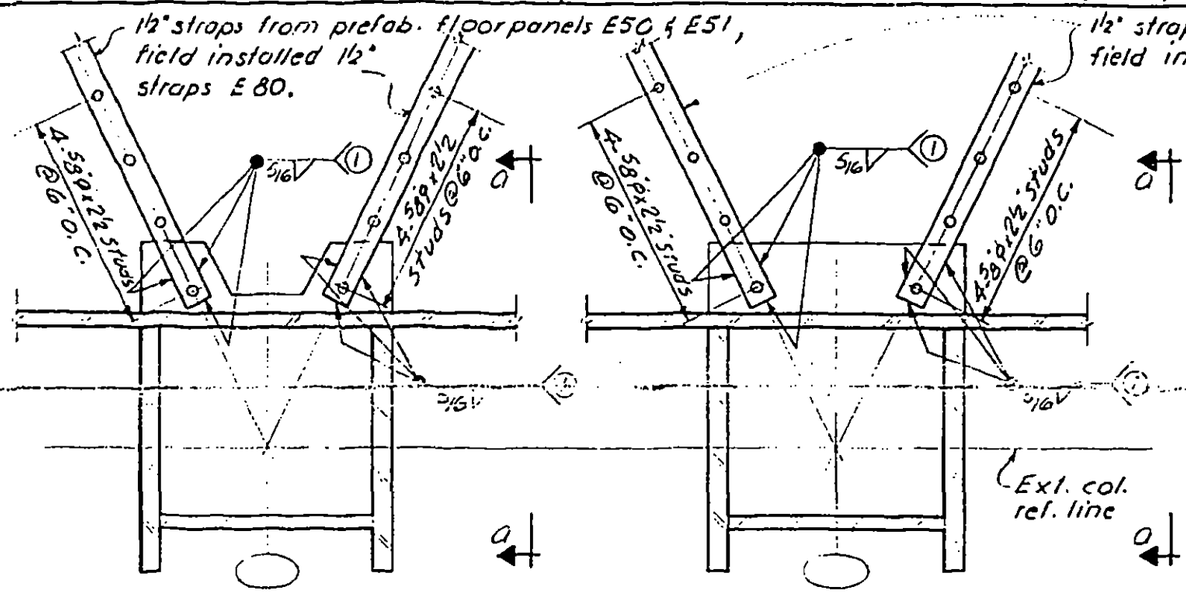

E50, E51, E80

E52, E81

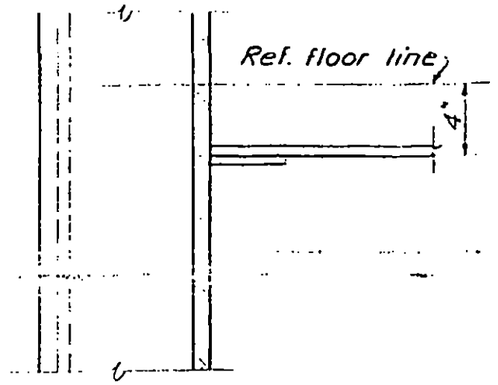

Section a-a

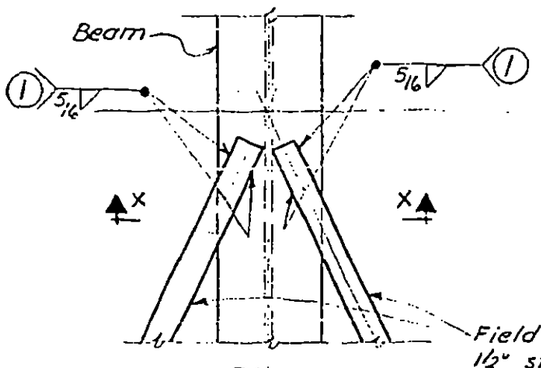

Plan

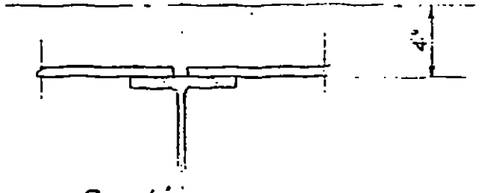

Section x-x

E82

Beam at 4

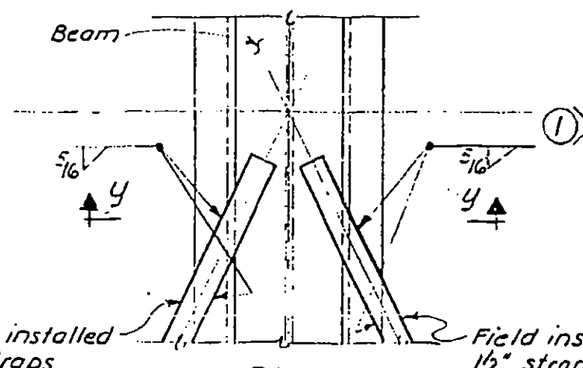

Plan

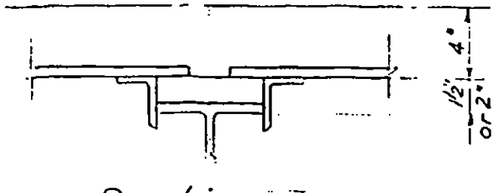

Section y-y

E82

Beam at -5½ or 6

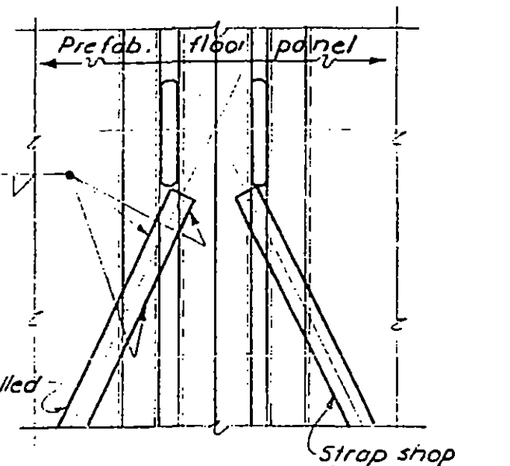

E83

Note (1)
Min. length of weld 3".

LICENSED PROFESSIONAL ENGINEER
LESLIE E. ROBERTSON
No. 34360
UNIVERSITY OF THE STATE OF NEW YORK

S. Karp

DRAWN A. FRANQUI

REVIEWED U. J. Brewer

15-AB4-5.1

SKILLING, HELLE, CHRISTIANSEN, ROBERTSON — Structural & Civil Engineers

PROJECT THE WORLD TRADE CENTER | TITLE DETAILS · E40, E42, E45, E53, E54, E55 | DATE 2-7-69

REVISIONS

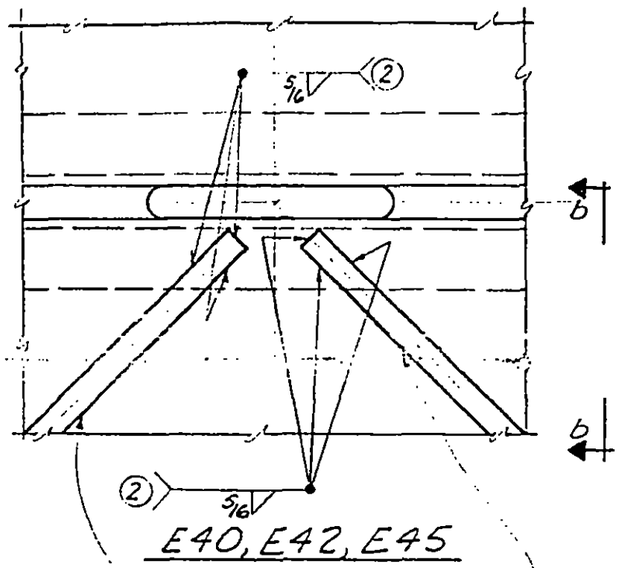

E40, E42, E45

*Field installed 1½" straps

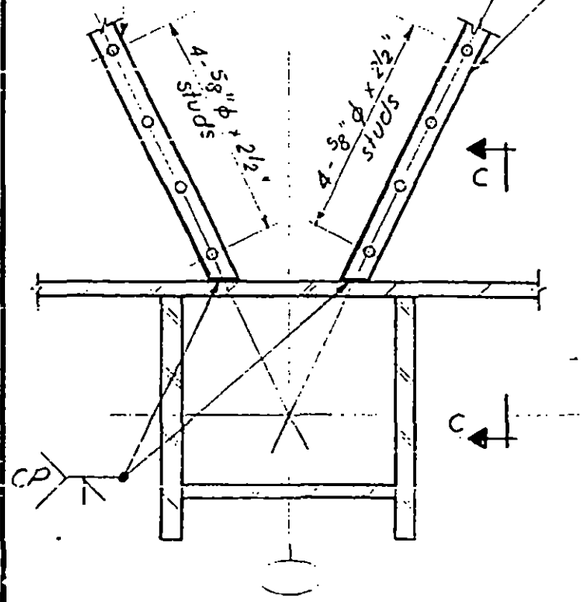

E53, E54, E55

Note (2):
Minimum length of weld 4".

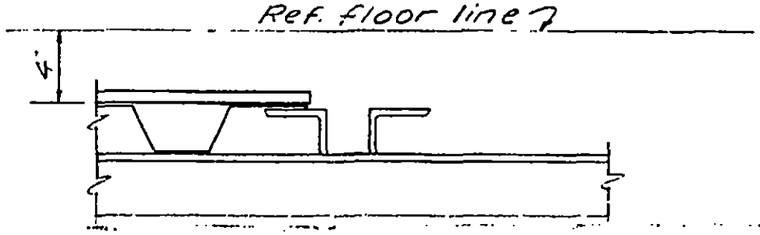

Section b-b

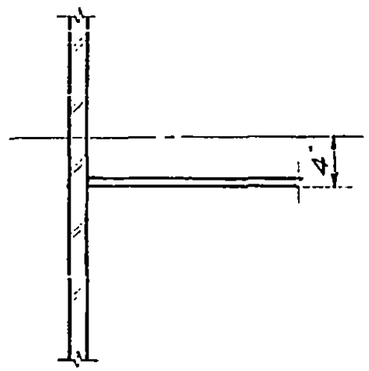

Section c-c

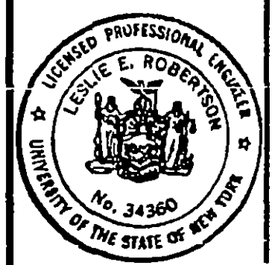

DESIGNED S. Karp

DRAWN A. Franqui

REVIEWED W. Brewer

18-AB4-5.2

SKILLING, HELLE, CHRISTIANSEN, ROBERTSON — Structural & Civil Engineers

PROJECT: THE WORLD TRADE CENTER | TITLE: DETAILS E44, E56, E57, E58, E59, E84 | DATE: 2-7-69

REVISIONS

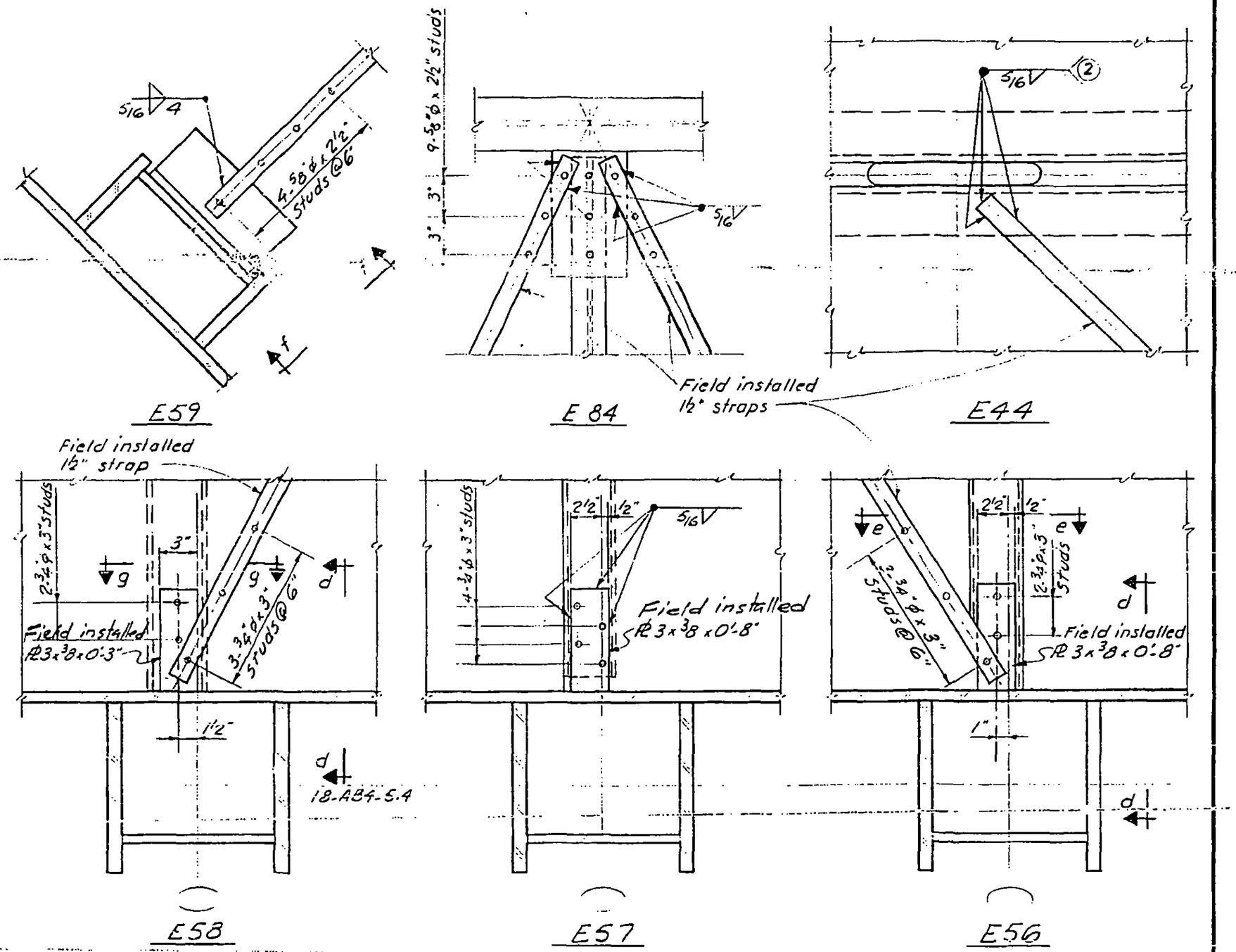

LICENSED PROFESSIONAL ENGINEER
LESLIE E. ROBERTSON
No. 34360
UNIVERSITY OF THE STATE OF NEW YORK

DESIGNED: S. Karp
DRAWN: A. Franqui
REVIEWED: W. Brewer

18-AB4-5.3

SKILLING, HELLE, CHRISTIANSEN, ROBERTSON — Structural & Civil Engineers

PROJECT THE WORLD TRADE CENTER | TITLE SECTIONS | DATE 2-7-69

REVISIONS

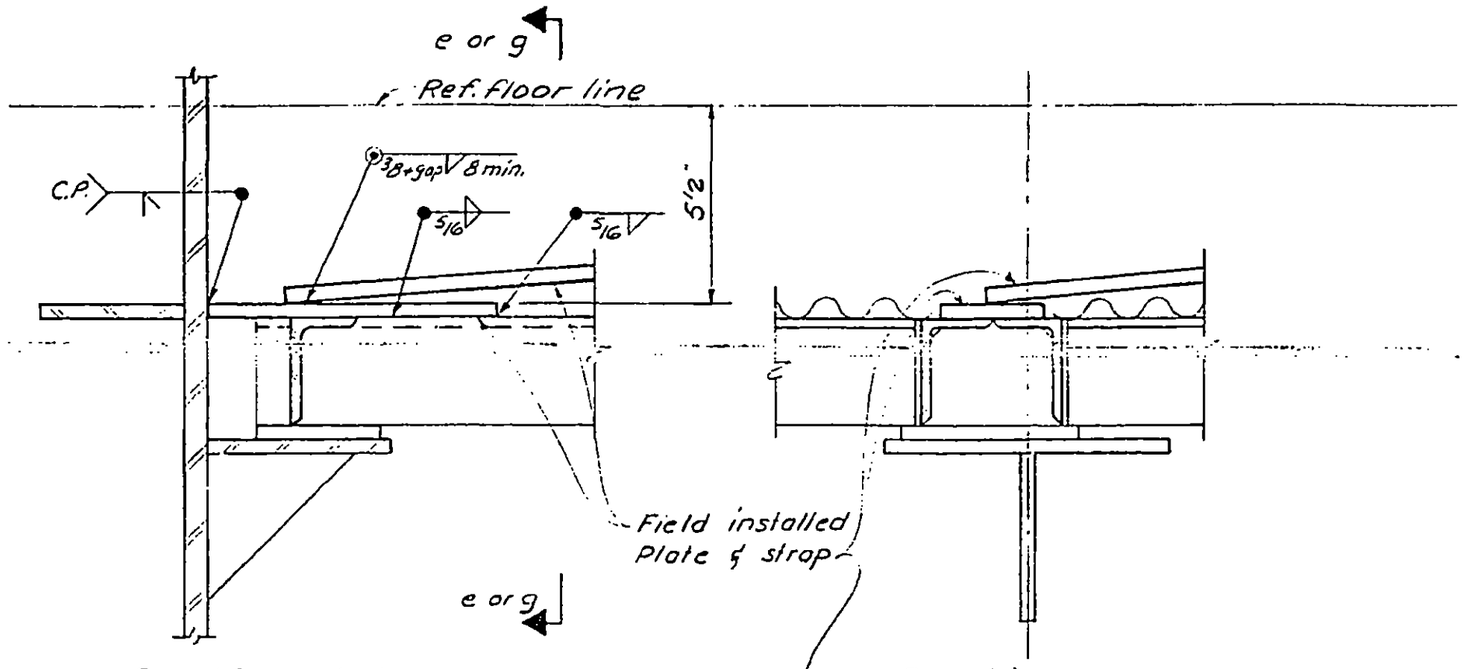

Section d-d

Section e-e

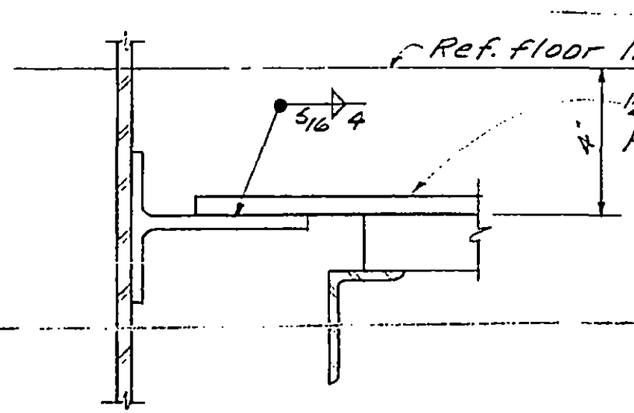

Section f-f

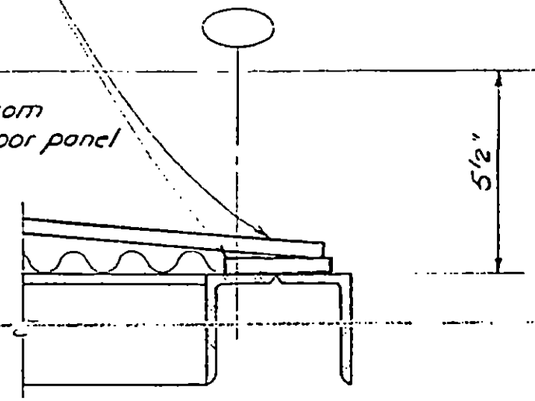

Section g-g

LICENSED PROFESSIONAL ENGINEER
LESLIE E. ROBERTSON
No. 34360
UNIVERSITY OF THE STATE OF NEW YORK

S. Karp

DRAWN A. Franqui

REVIEWED W. Brewer

18-AB4-5.4

SKILLING, HELLE, CHRISTIANSEN, ROBERTSON — Structural & Civil Engineers

PROJECT THE WORLD TRADE CENTER | TITLE DETAIL E51D, E52D | DATE 2-7-69

REVISIONS

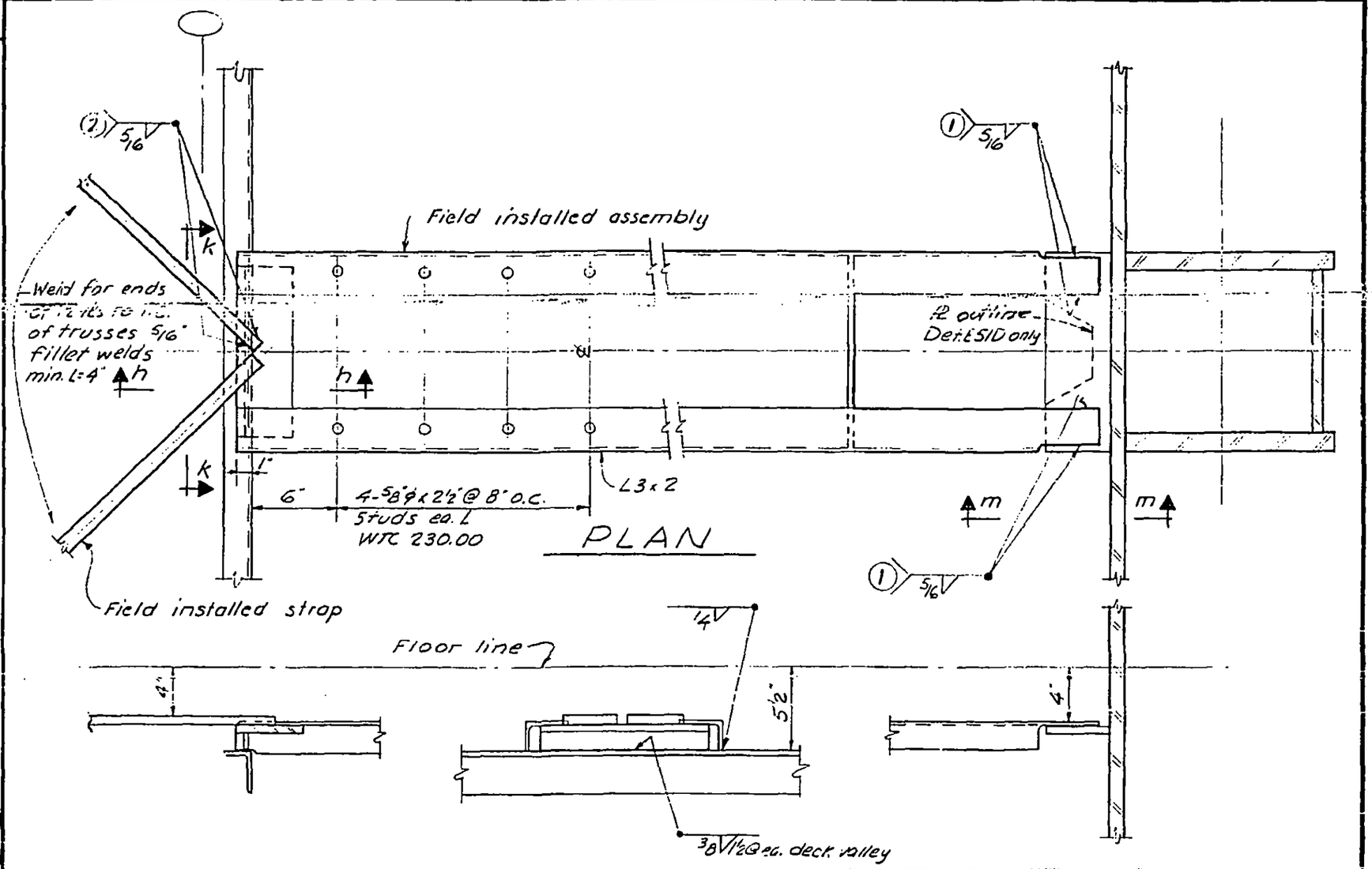

Section h-h

Section k-k

Section m-m

LICENSED PROFESSIONAL ENGINEER LESLIE E. ROBERTSON No. 34360 UNIVERSITY OF THE STATE OF NEW YORK

DESIGNED S. Karp

DRAWN A. Franqui

REVIEWED W. Brewer

18-AB4-5.5

SKILLING, HELLE, CHRISTIANSEN, ROBERTSON — Structural & Civil Engineers

PROJECT THE WORLD TRADE CENTER | TITLE DETAIL E54A | DATE 2-7-69

REVISIONS

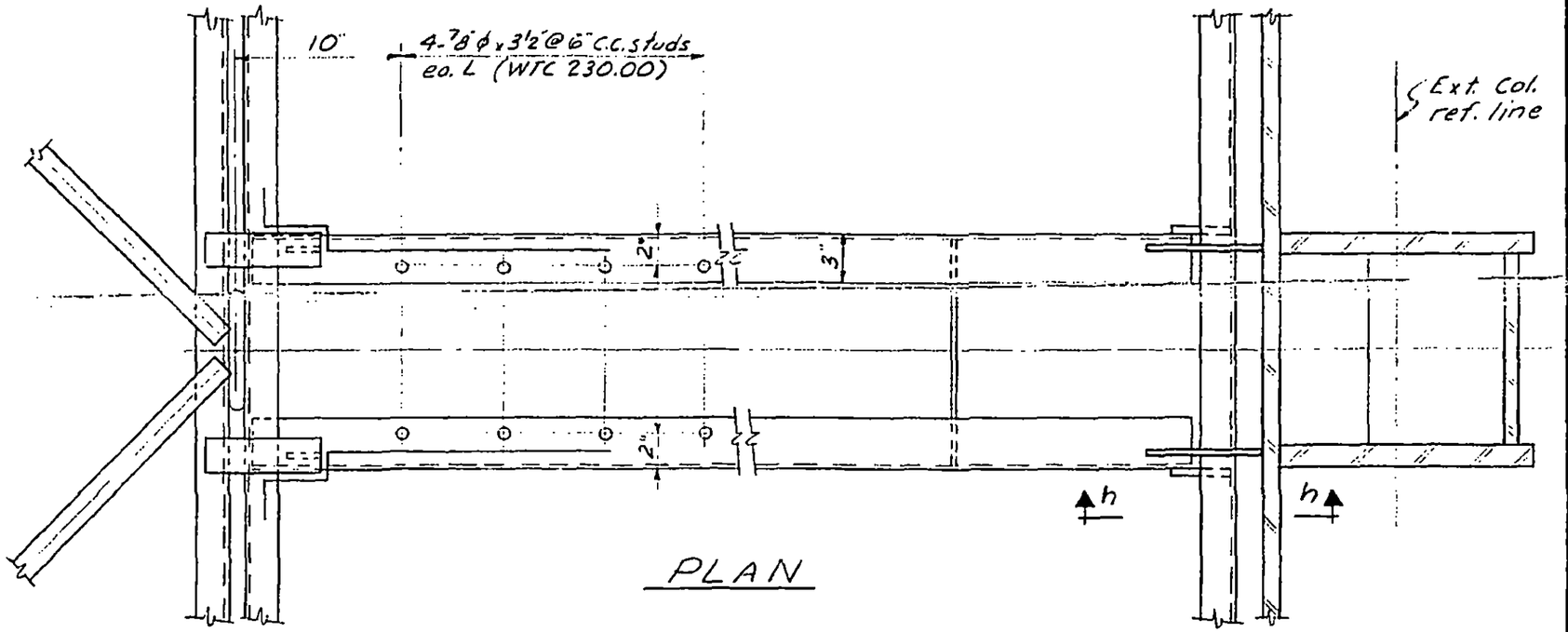

PLAN

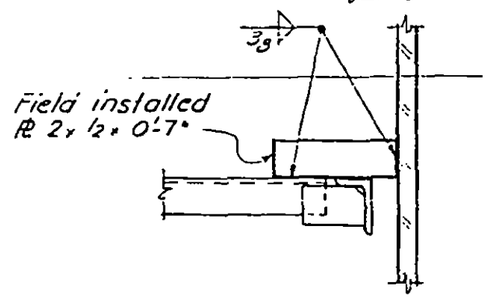

Section h-h

LICENSED PROFESSIONAL ENGINEER
LESLIE E. ROBERTSON
No. 34360
UNIVERSITY OF THE STATE OF NEW YORK

DESIGNED S. Karp
DRAWN A. Franqui
REVIEWED W. Brewer

18-AB4-5.6

SKILLING, HELLE, CHRISTIANSEN, ROBERTSON — Structural & Civil Engineers

PROJECT THE WORLD TRADE CENTER | TITLE DETAIL E59A | DATE 2-7-69

REVISIONS

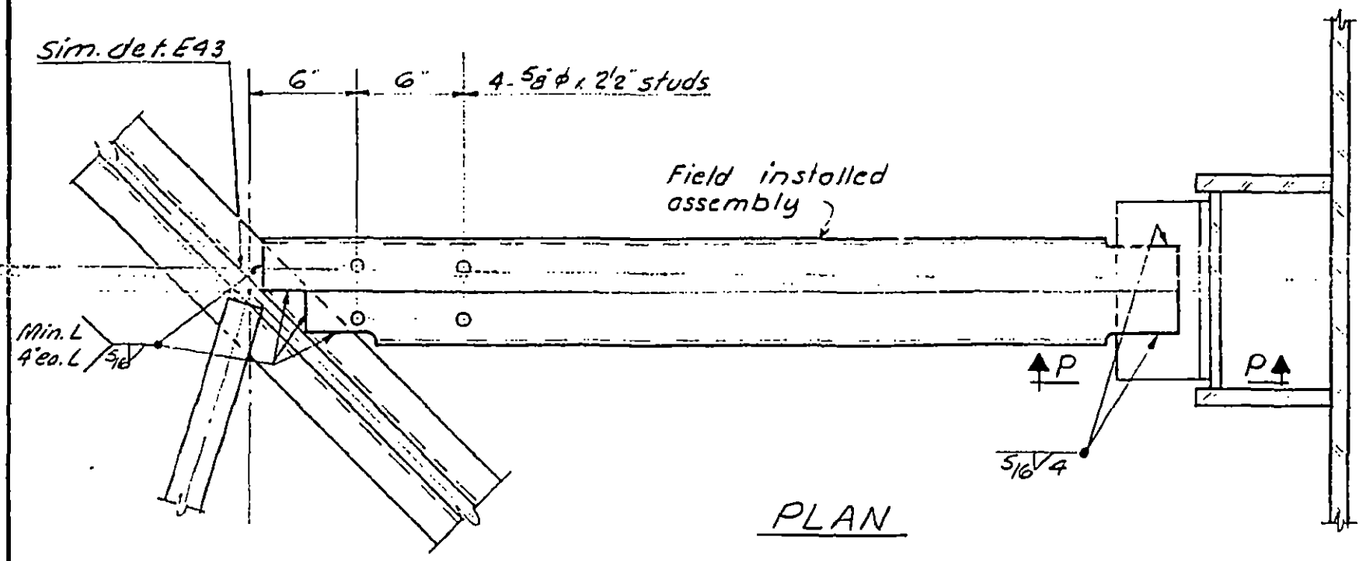

PLAN

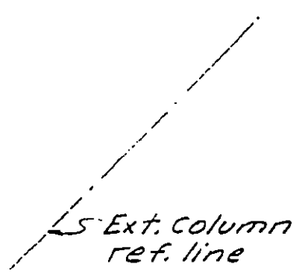

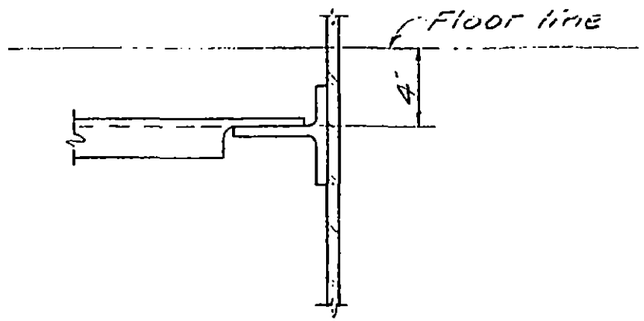

Section p.-p

LICENSED PROFESSIONAL ENGINEER LESLIE E. ROBERTSON No. 34360 UNIVERSITY OF THE STATE OF NEW YORK

DESIGNED S. Karp
DRAWN A. Franqui
REVIEWED W. Brewer

18-AB4-5.7

SKILLING, HELLE, CHRISTIANSEN, ROBERTSON — Structural & Civil Engineers

PROJECT THE WORLD TRADE CENTER | TITLE DETAILS 159,160,161,161A,163 & 163C | DATE 2-7-69

REVISIONS

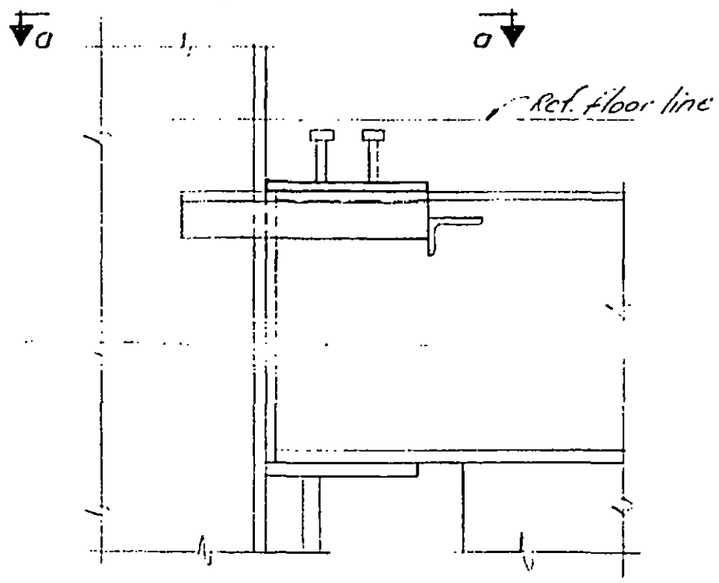

Detail 159 160 161

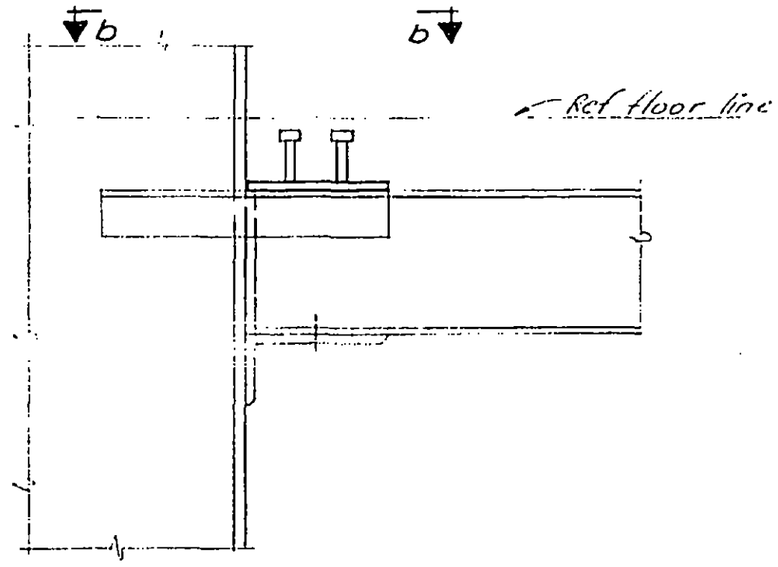

Detail 163 & 163C

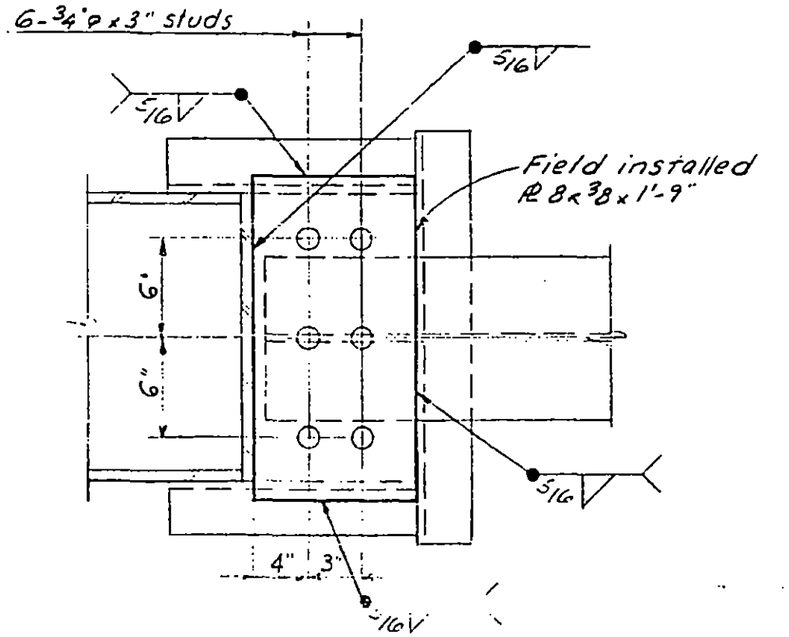

Plan a-a

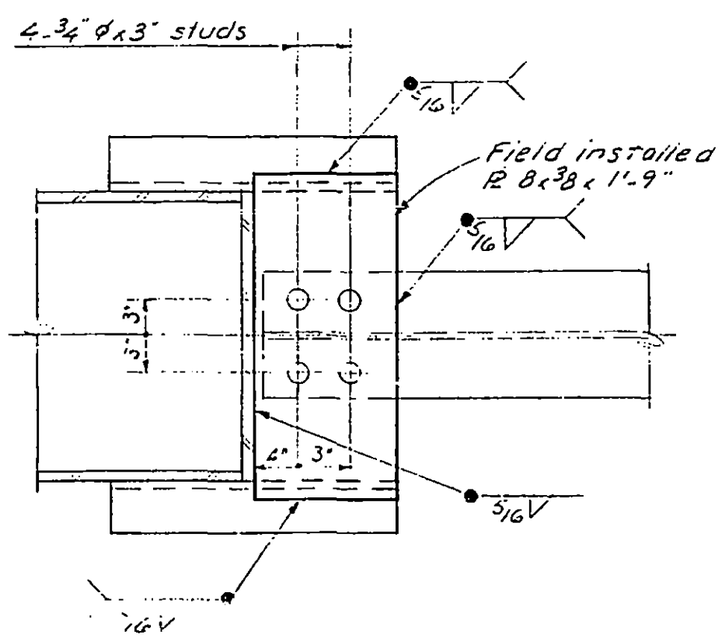

Plan b-b

LICENSED PROFESSIONAL ENGINEER
LESLIE E. ROBERTSON
No. 34360
UNIVERSITY OF THE STATE OF NEW YORK

DESIGNED S. Karp
DRAWN J. Adams
REVIEWED W. Brewer

18-A84-6.1

SKILLING, HELLE, CHRISTIANSEN, ROBERTSON — Structural & Civil Engineers

PROJECT THE WORLD TRADE CENTER | TITLE DETAILS 150-158, 162, 164-169, 163A, B | DATE 2-7-69

REVISIONS

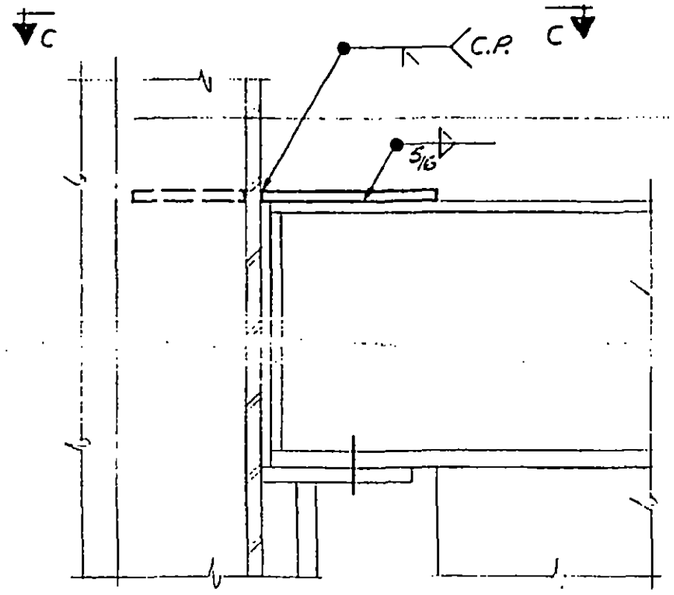

150-158, 162, 164-169

Field installed PL,
PL 5 x 3/8 x 1'-0" for 164, 164A, 165
PL 6 x 3/8 x 1'-0" for all others.

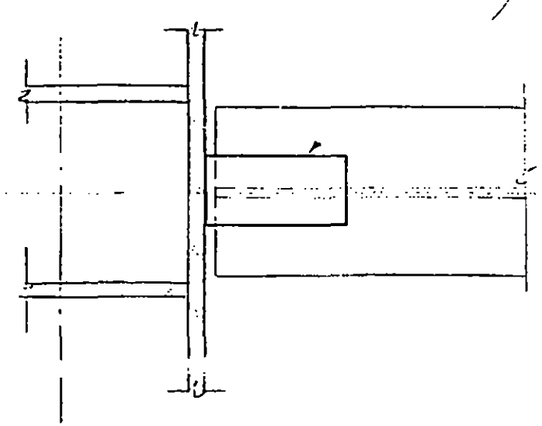

Plan C-C

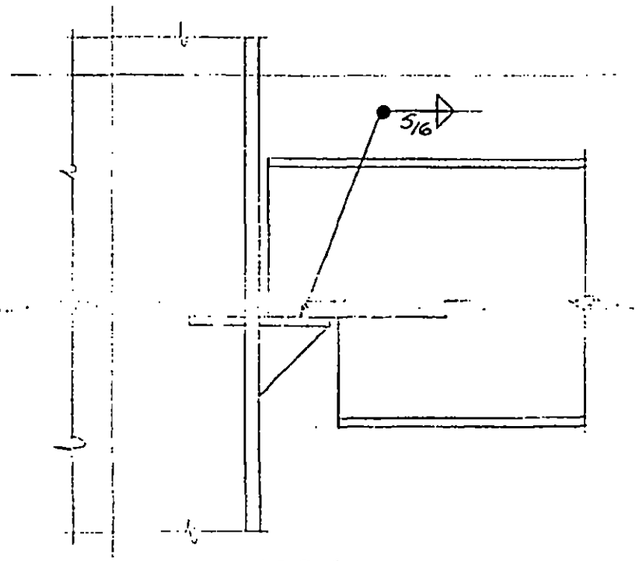

163A

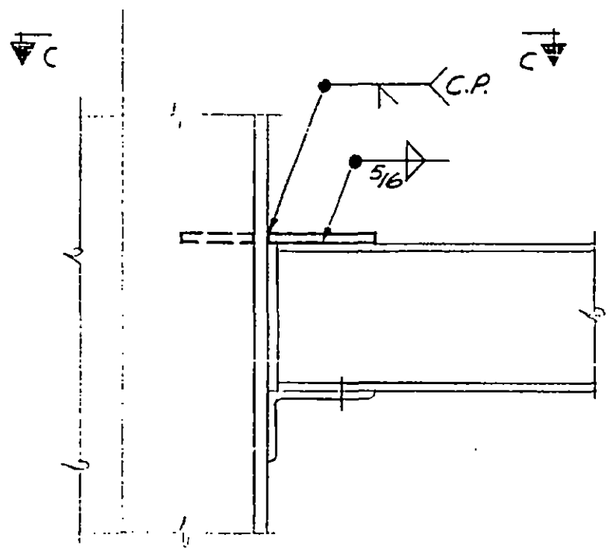

163B

LICENSED PROFESSIONAL ENGINEER
LESLIE E. ROBERTSON
No. 34360
UNIVERSITY OF THE STATE OF NEW YORK

S. Kaip
DRAWN J. Adams
REVIEWED W. Brewer

18-AB4-6.2

SKILLING, HELLE, CHRISTIANSEN, ROBERTSON — Structural & Civil Engineers

PROJECT THE WORLD TRADE CENTER | TITLE DETAILS 8.9, 8.10 & 8.X | DATE 11/7/69

REVISIONS

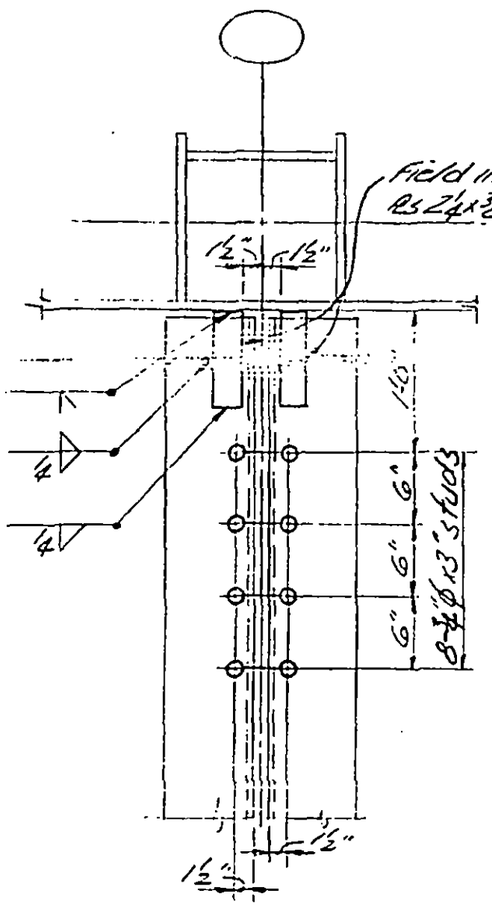

Detail 8.4

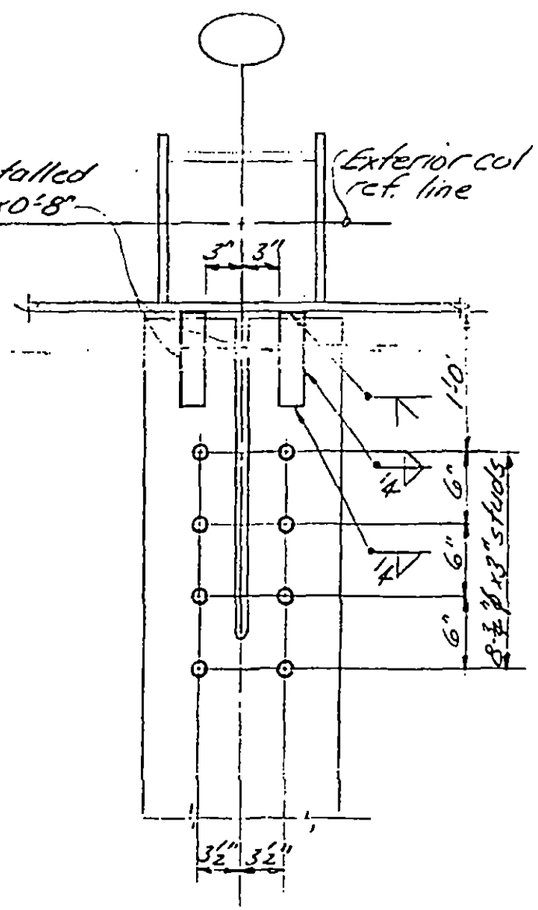

Detail 8.10

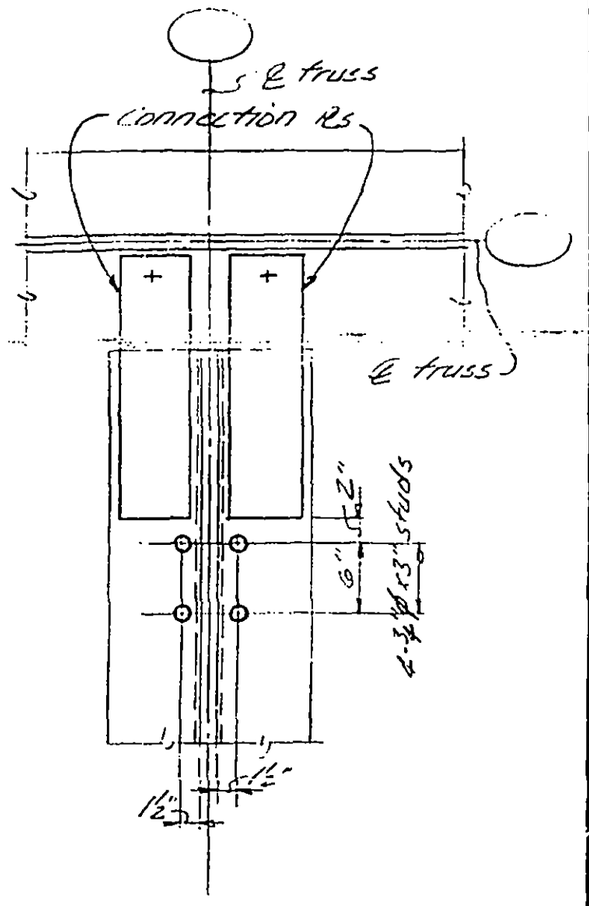

Detail 8.X

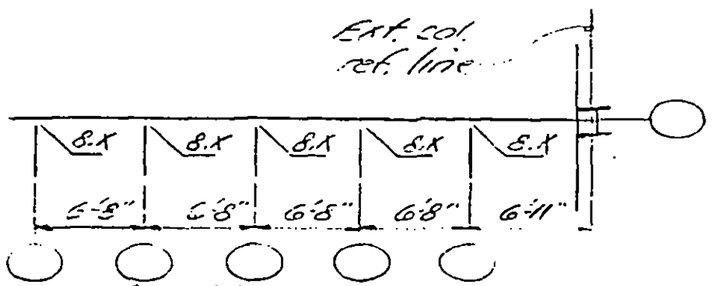

Key Plan Detail 8.X
see 18-AB3-4.3, 4.4 & 4.5 for locations

LICENSED PROFESSIONAL ENGINEER
LESLIE E. ROBERTSON
No 34360
UNIVERSITY OF THE STATE OF NEW YORK

DESIGNED

DRAWN

REVIEWED

18-AB4-7.1

SKILLING, HELLE, CHRISTIANSEN, ROBERTSON — Structural & Civil Engineers

PROJECT: THE WORLD TRADE CENTER | TITLE: DETAILS 10.1A, 10.1B & 10.1C | DATE: 11/7/69

REVISIONS

12/3/69

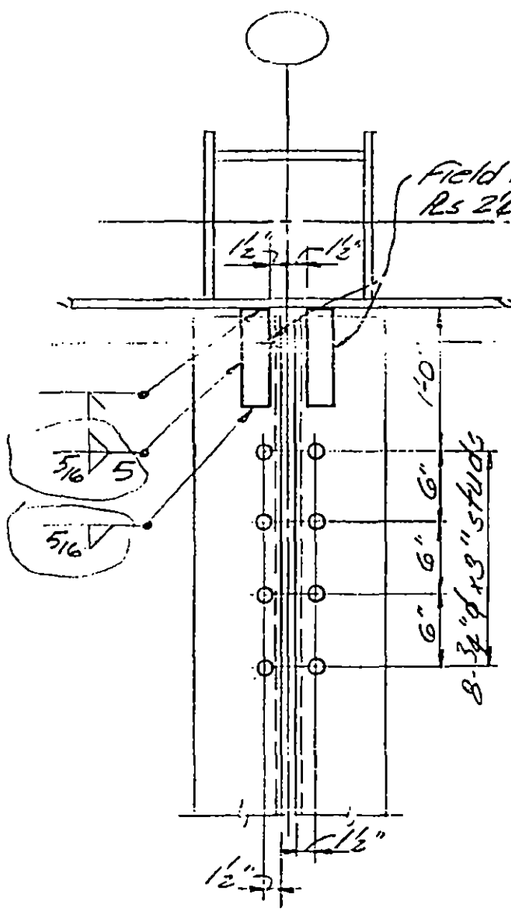

Detail 10.1A

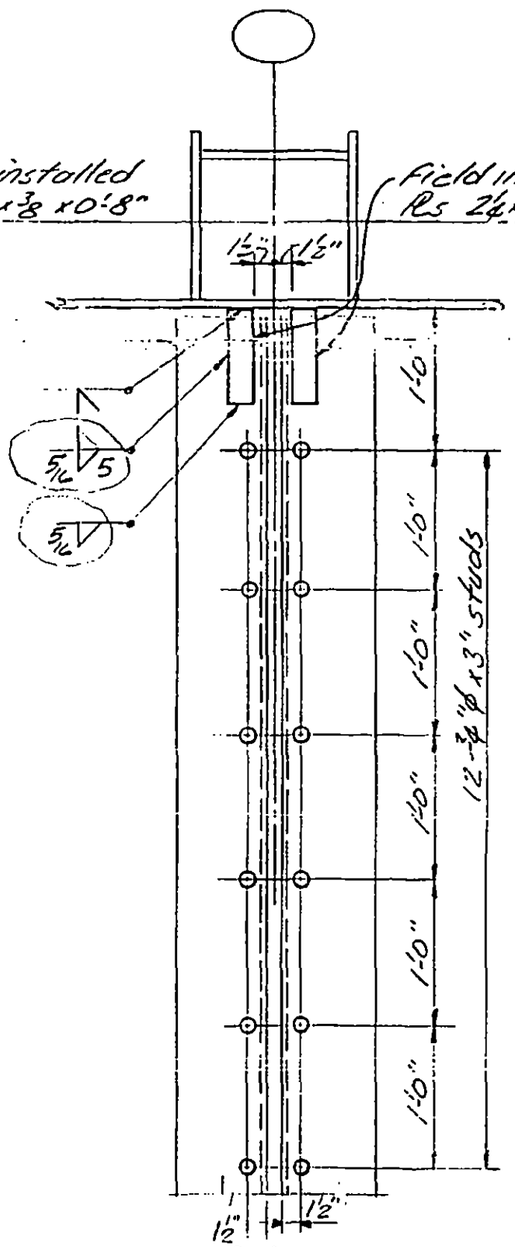

Detail 10.1B

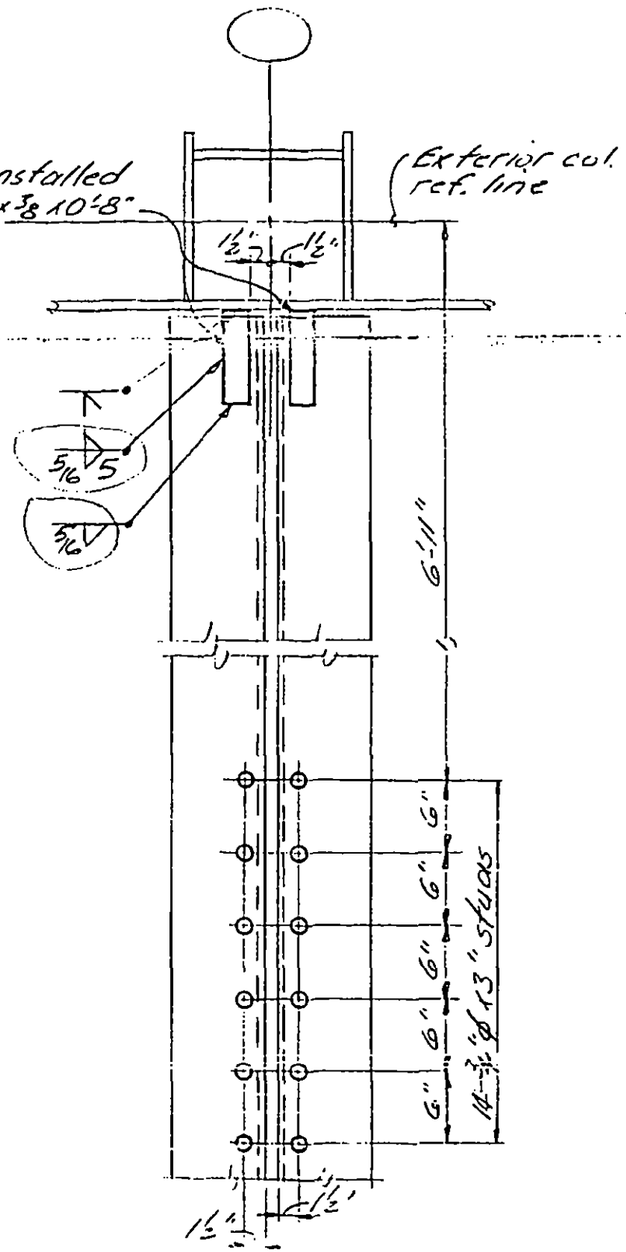

Detail 10.1C

LICENSED PROFESSIONAL ENGINEER
LESLIE E. ROBERTSON
No 34360
UNIVERSITY OF THE STATE OF NEW YORK

DESIGNED

DRAWN

I.V. Brewer

18-A84-7.2

SKILLING, HELLE, CHRISTIANSEN, ROBERTSON — Structural & Civil Engineers

PROJECT: THE WORLD TRADE CENTER | TITLE: DETAILS 10.2A & 10.2B, 10.3A, 10.3B, 10.3C, 10.4A & 10.4B | DATE: 11-7-69

REVISIONS

12/3/69

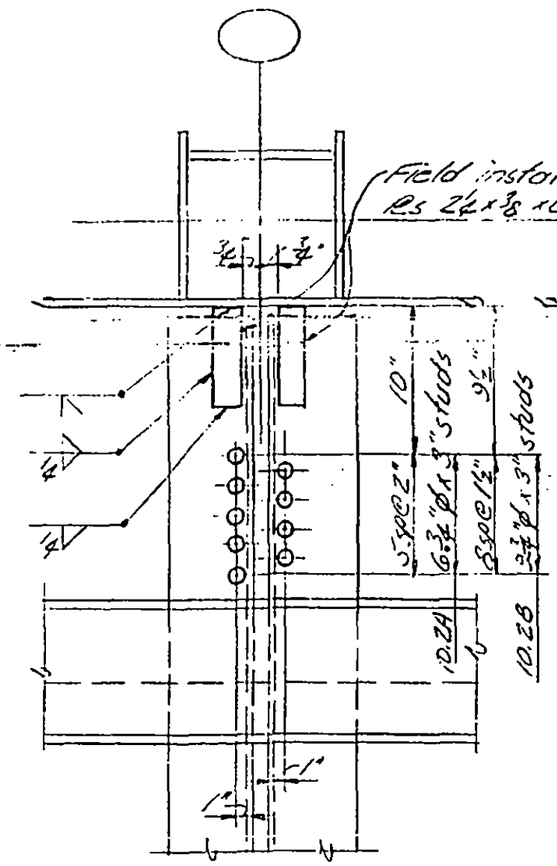

Detail 10.2A & 10.2B

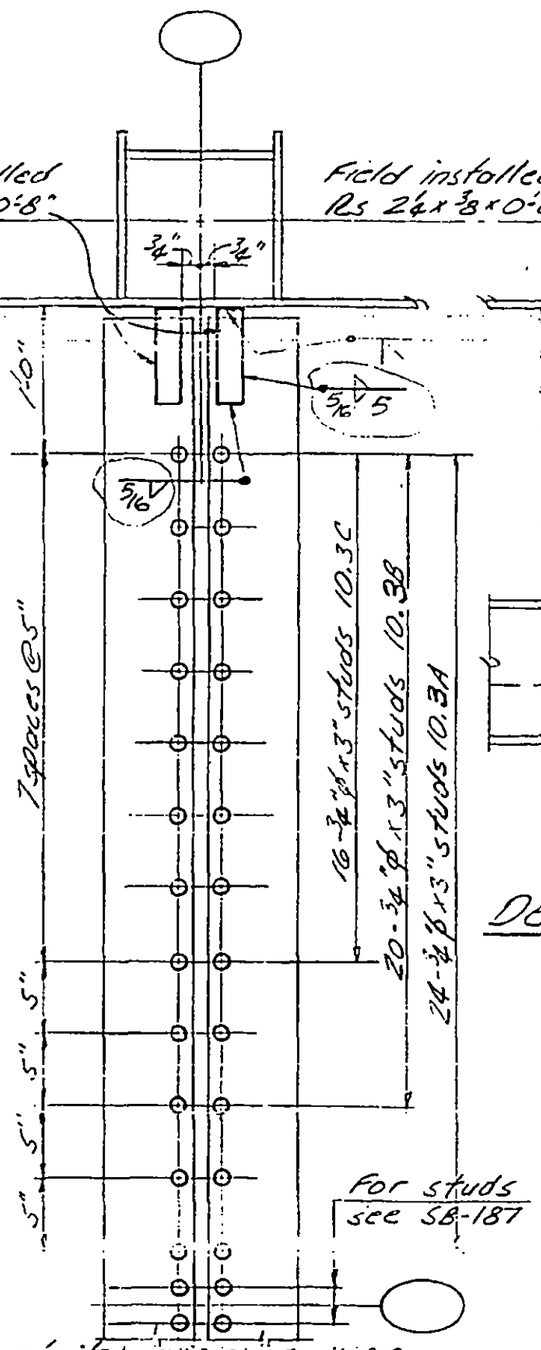

Detail 10.3A, 10.3B, 10.3C

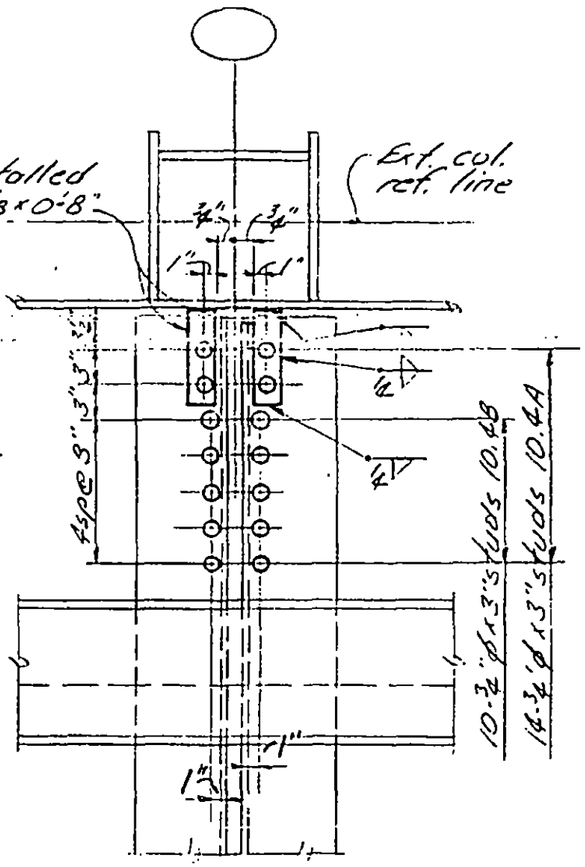

Detail 10.4A & 10.4B

LICENSED PROFESSIONAL ENGINEER
LESLIE E. ROBERTSON
No 34360
UNIVERSITY OF THE STATE OF NEW YORK

DESIGNED

DRAWN

REVIEWED W. Flower

18-A84-7.3

SKILLING, HELLE, CHRISTIANSEN, ROBERTSON — Structural & Civil Engineers

PROJECT: THE WORLD TRADE CENTER | TITLE: DETAILS 12.1 - 12.5, 12.9 & 12.10 | DATE: 11/7/69

REVISIONS

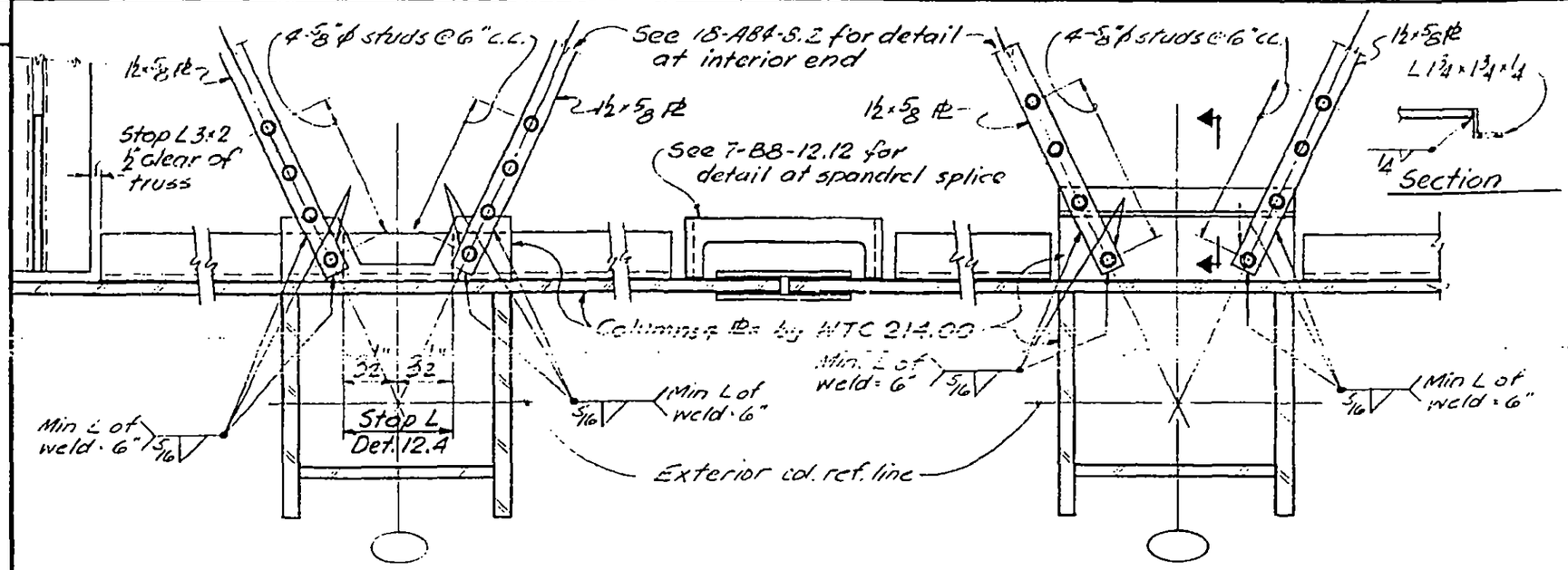

DETAIL 12.1 & 12.4

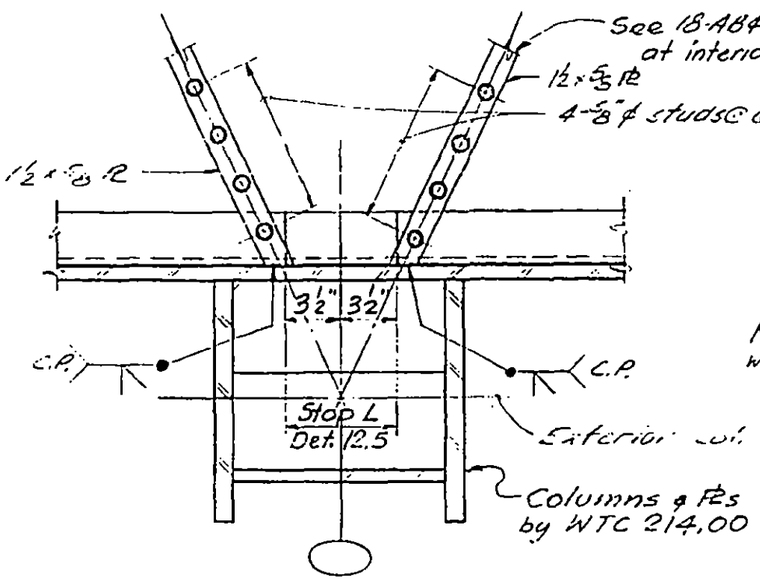

DETAIL 12.3 & 12.5

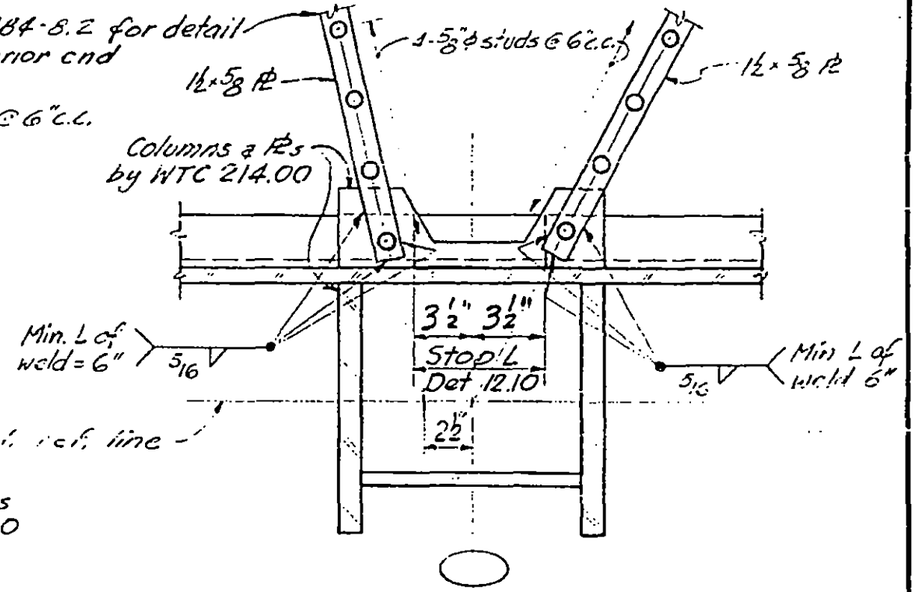

DETAIL 12.9 & 12.10

DESIGNED

DRAWN J. Adams

REVISED (1). Brewer

LICENSED PROFESSIONAL ENGINEER — LESLIE E. ROBERTSON — No. 34360 — UNIVERSITY OF THE STATE OF NEW YORK

18-AB4-8.1

SKILLING, HELLE, CHRISTIANSEN, ROBERTSON — Structural & Civil Engineers

PROJECT THE WORLD TRADE CENTER | TITLE DETAILS 12.6, 12.7 & 12.8 | DATE 11/7/69

REVISIONS

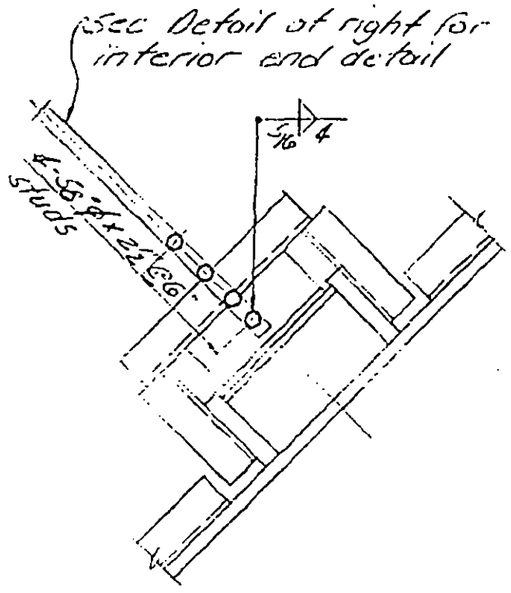

Detail 12.6 & 12.7

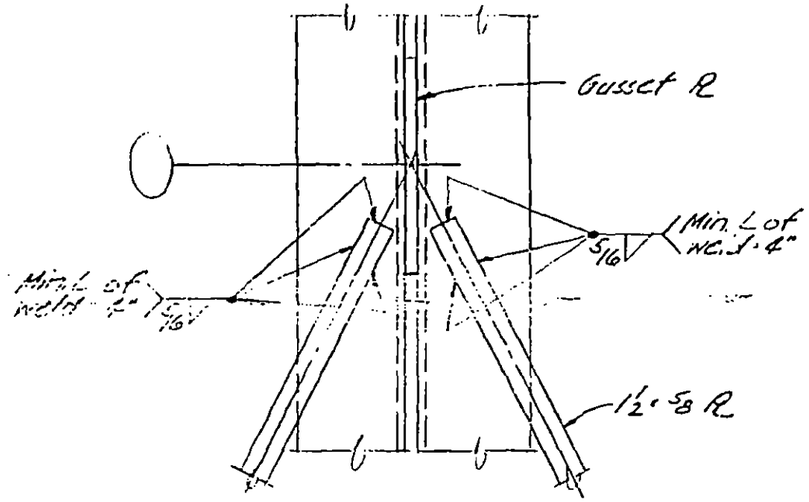

Interior Detail Parallel to Truss

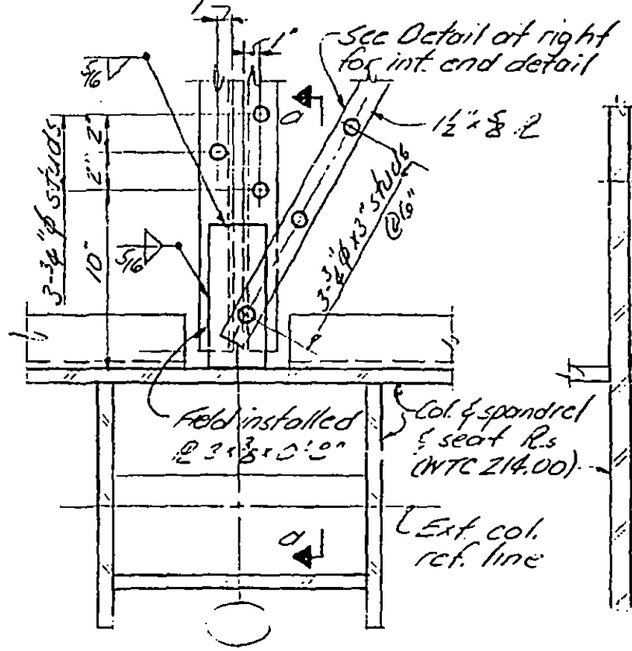

Detail 12.8

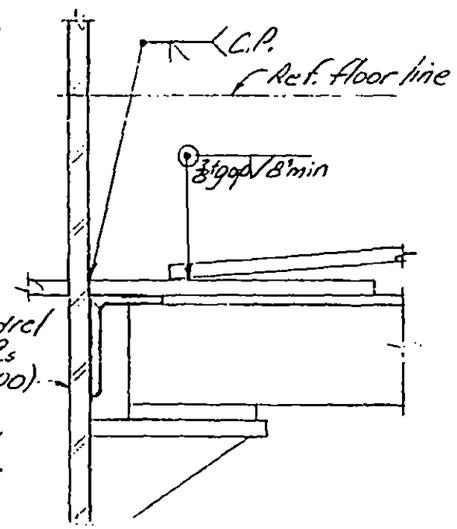

Section a-a

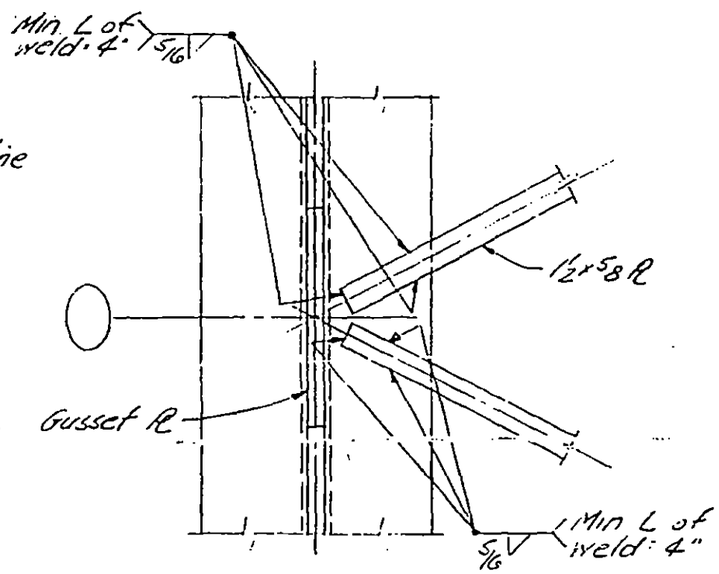

Interior Detail Perpendicular to Truss

LICENSED PROFESSIONAL ENGINEER
LESLIE E. ROBERTSON
No 34360
UNIVERSITY OF THE STATE OF NEW YORK

DESIGNED

DRAWN

REVIEWED

18-AB4-B.2

SKILLING, HELLE, CHRISTIANSEN, ROBERTSON — Structural & Civil Engineers

PROJECT: THE WORLD TRADE CENTER | TITLE: DETAIL 12.11A, 12.11B & 12.11C | DATE: 11/7/69

REVISIONS

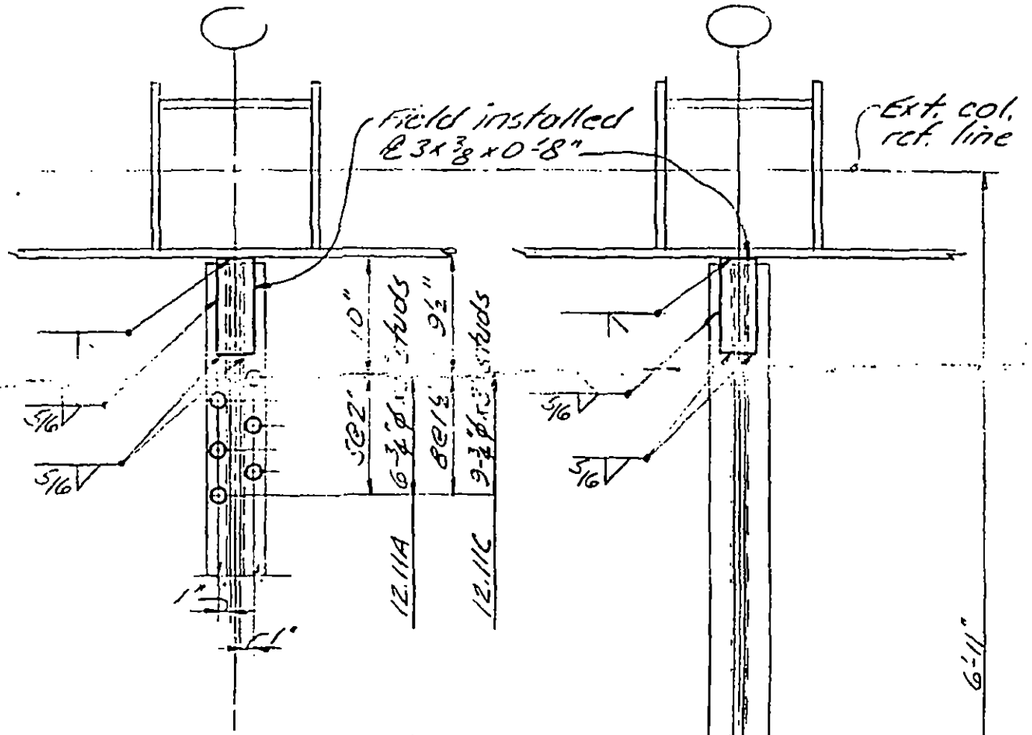

Detail 12.11A & 12.11C

Detail 12.11B

LICENSED PROFESSIONAL ENGINEER
LESLIE E. ROBERTSON
No 34360
UNIVERSITY OF THE STATE OF NEW YORK

DESIGNED

DRAWN

REVIEWED

18-A84-8.3

SKILLING, HELLE, CHRISTIANSEN, ROBERTSON — Structural & Civil Engineers

PROJECT THE WORLD TRADE CENTER | TITLE DETAILS 13.1, 13.2, 13.3 | DATE 11·7·69

REVISIONS

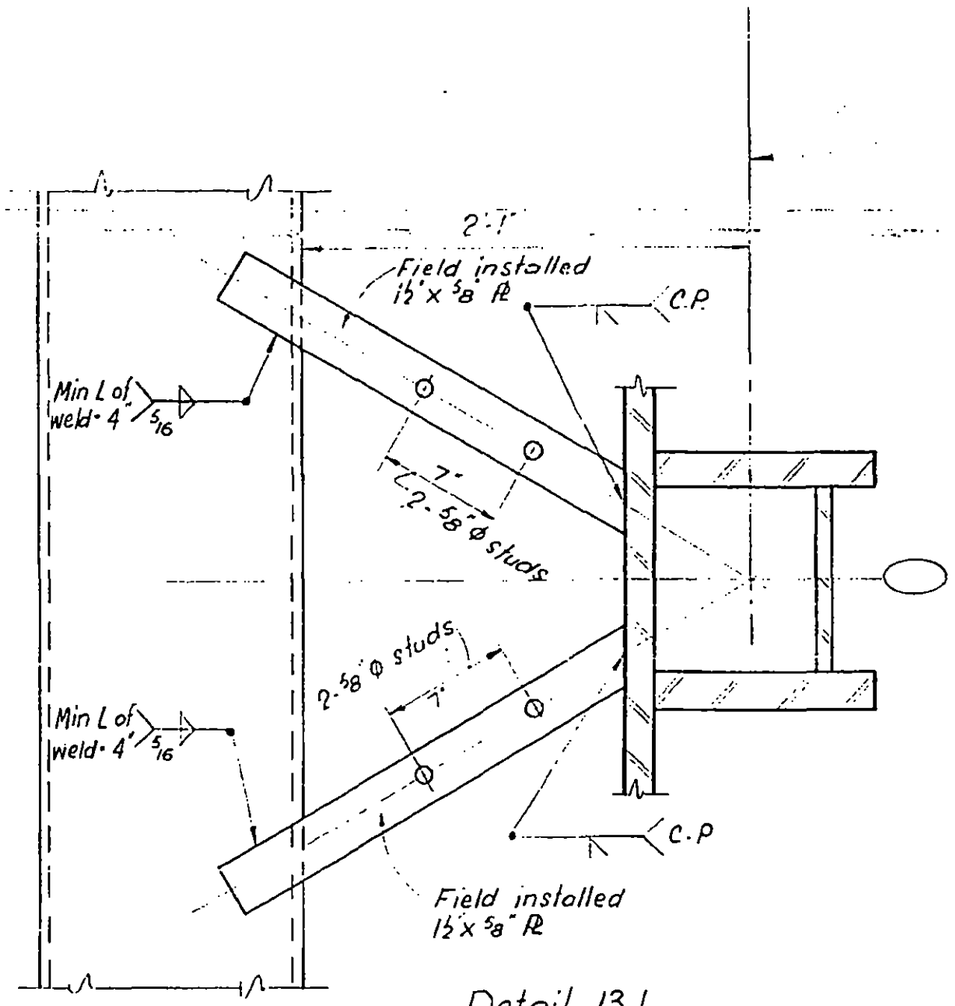

Detail 13.1

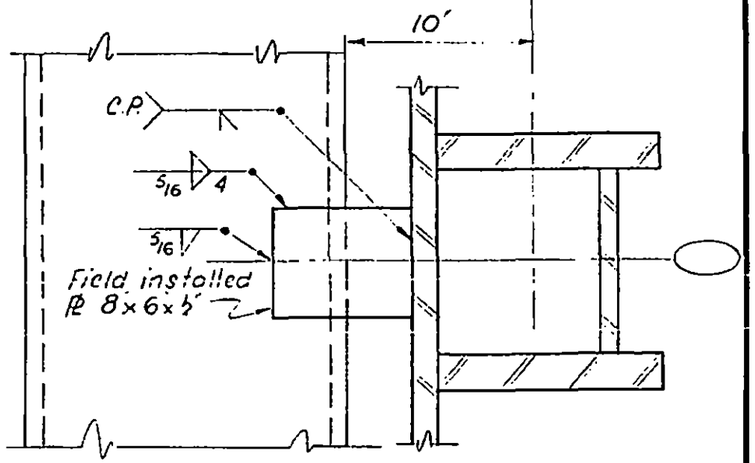

Detail 13.2 & 13.3

LICENSED PROFESSIONAL ENGINEER LESLIE E. ROBERTSON No 34360 UNIVERSITY OF THE STATE OF NEW YORK

DESIGNED W. Brewer

DRAWN T Terrelonge

REVIEWED

18-AB4-9

SKILLING, HELLE, CHRISTIANSEN, ROBERTSON — Structural & Civil Engineers

PROJECT: THE WORLD TRADE CENTER | TITLE: STUD ARRANGEMENT A & D | DATE: 11/7/69

REVISIONS

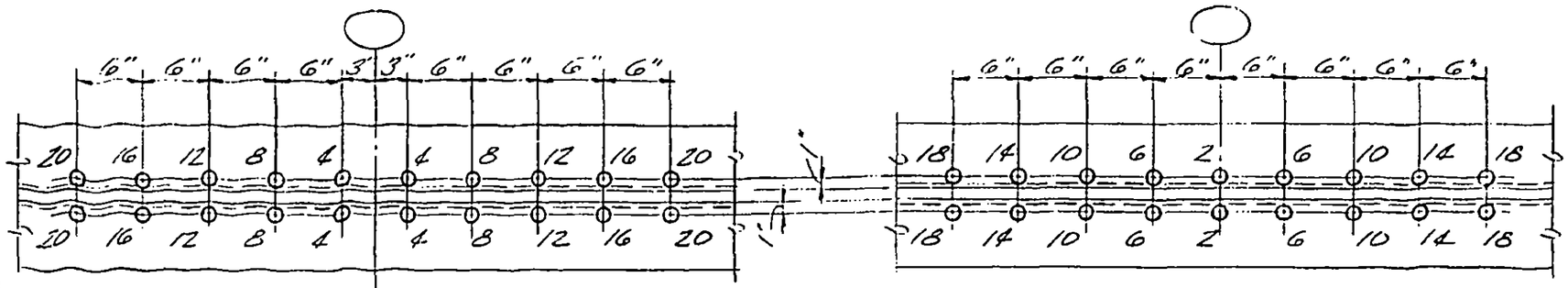

Arrangement A 4 8 12 16 20

Arrangement A 2 6 10 14 18

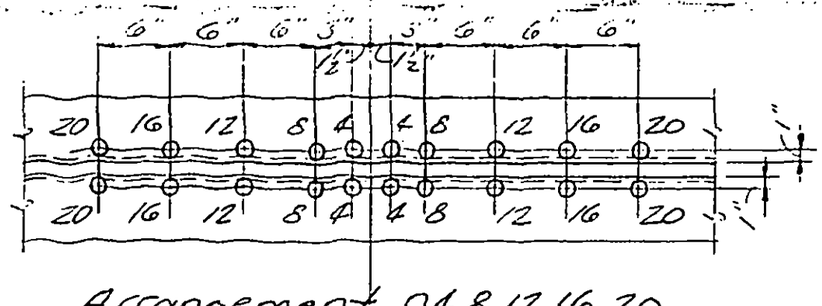

Arrangement D 4 8 12 16 20

Notes:

1. All studs shall be ¾"ϕ x 3" long headed studs unless otherwise noted.
2. For shear stud requirement of top panel points see Dwg. SB-187. Example (A10) indicates 10 studs located as shown in Arrangement A. Shear studs shall be placed at each location identified in the applicable arrangement by a number equal to or smaller than the number of studs required.

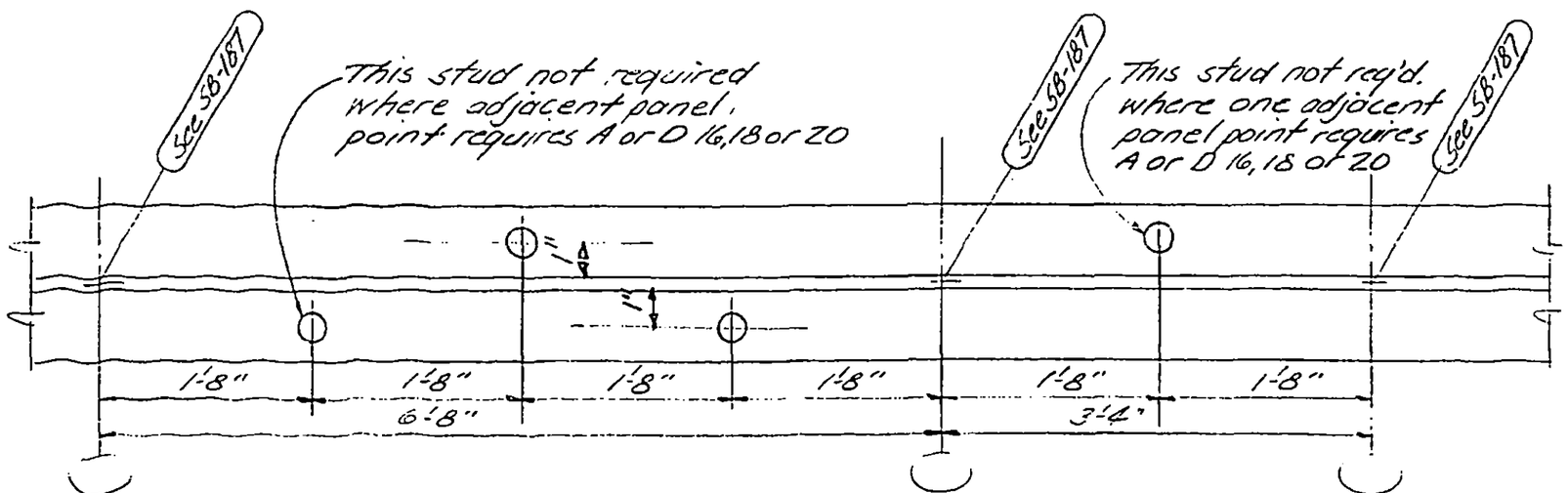

Typical Arrangement Between Panel Points

LICENSED PROFESSIONAL ENGINEER — LESLIE E. ROBERTSON — No 34360 — UNIVERSITY OF THE STATE OF NEW YORK

DESIGNED

DRAWN

REVIEWED

18-AB4-10.1

SKILLING, HELLE, CHRISTIANSEN, ROBERTSON — Structural & Civil Engineers

PROJECT: THE WORLD TRADE CENTER | TITLE: STUD ARRANGEMENT B, C, E & F | DATE: 11/7/69

REVISIONS

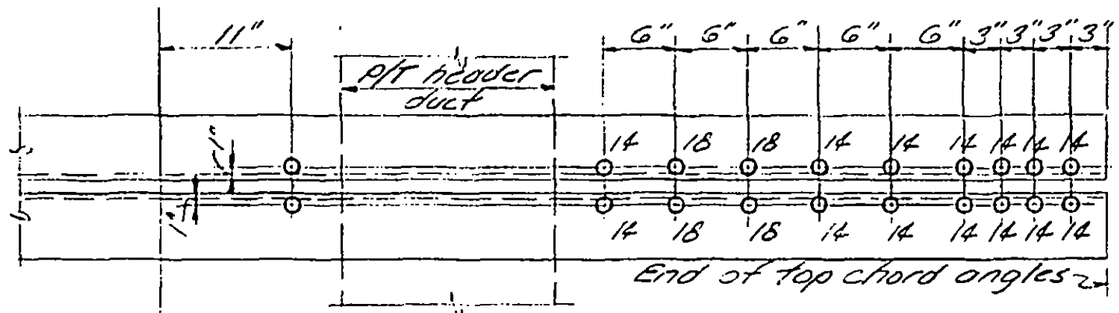

Arrangement B 14 & 18

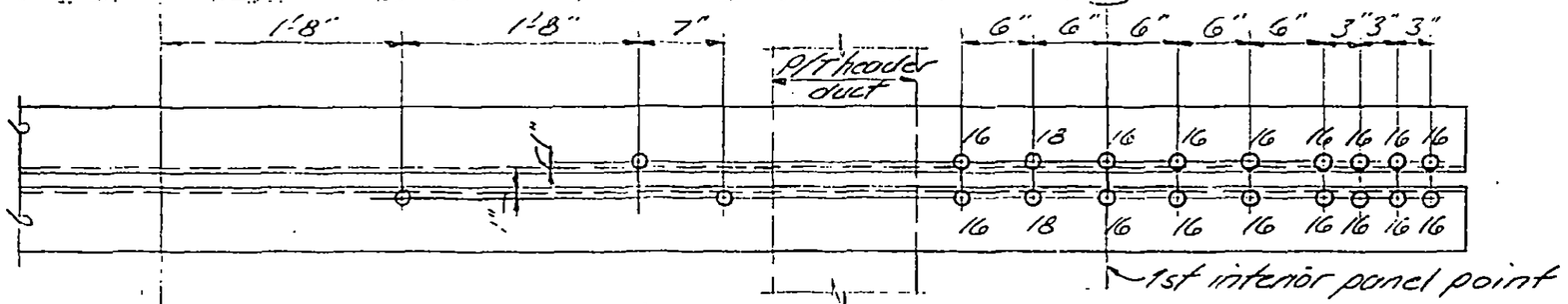

Arrangement C 16, 18

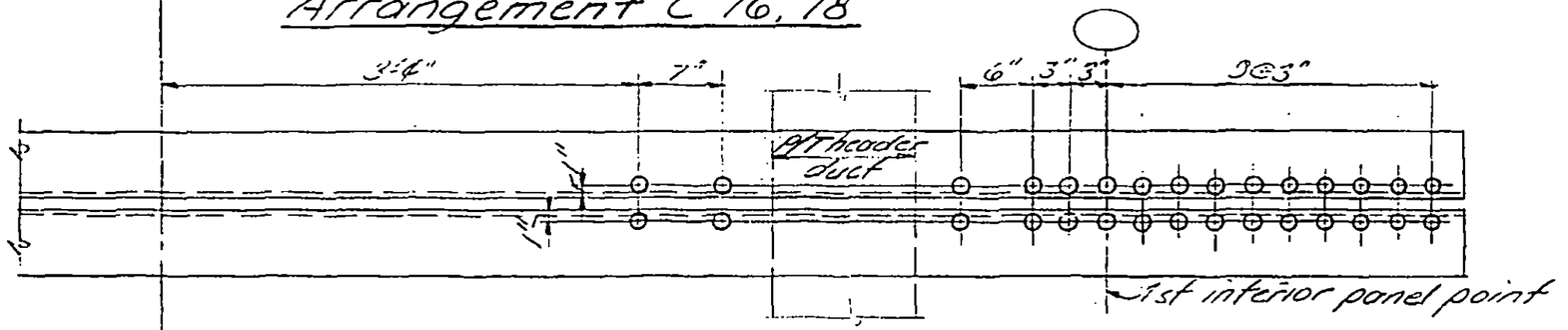

Arrangement E26

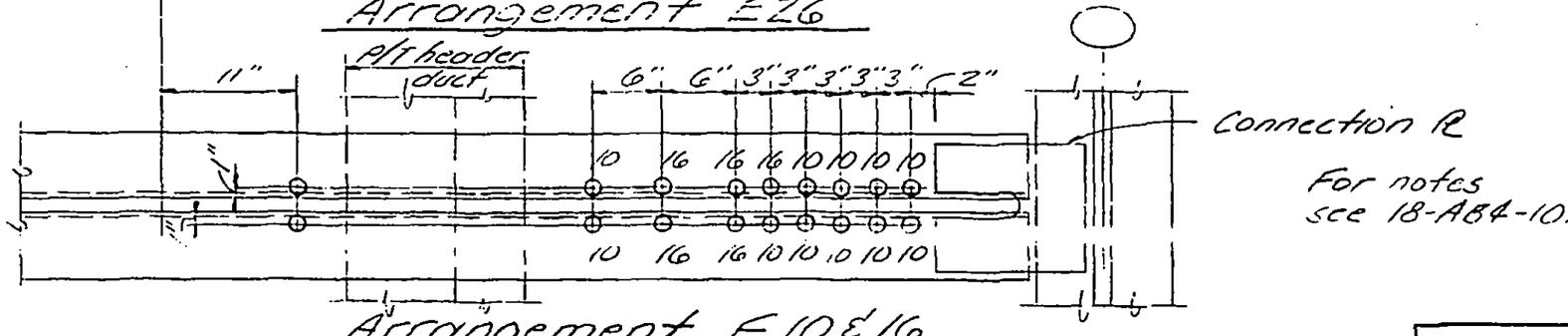

Arrangement F 10 & 16

LICENSED PROFESSIONAL ENGINEER
LESLIE E. ROBERTSON
No 34360
UNIVERSITY OF THE STATE OF NEW YORK

DESIGNED

DRAWN

REVIEWED

18-AB4-10.2

SKILLING, HELLE, CHRISTIANSEN, ROBERTSON — Structural & Civil Engineers

PROJECT	TITLE	DATE
THE WORLD TRADE CENTER	DRAWING BOOK 20-STRUCTURAL STEEL-INDEX, DATES	11/26/71

REVISIONS

DWG. NO.	TITLE	DATE
20-AB- 0	INDEX & DATE PAGE	11/26/71
20-AB- 0.1	GEN. NOTES	10/ 9/68
20-A - 1	DETAIL 1	10/ 9/68
20-A - 2	DETAIL 2	11/20/68
20-AB- 3	DETAIL 3	10/ 9/68
20-AB- 4	DETAIL 4	11/20/68
20-AB- 5	DETAIL 5	11/20/68
20-AB- 6	DETAIL 6	10/ 9/68
20-AB- 7	DETAIL 7	11/20/68
20-AB- 8	DETAIL 8	11/20/68
20-AB- 8.1	DETAIL 8	10/ 9/68
20-A - 9	DETAIL 9	10/ 9/68
20-AB-10	DETAIL 10	6/24/69
20-B -11	DETAIL 11	10/ 9/68
20-B -12	DETAIL 12	10/ 9/68
20-AB-13	DETAIL 13	10/ 9/68
20-AB-14	DETAIL 14	10/ 9/68
20-AB-15	DETAIL 15	3/12/71
20-AB-16	CONN DETAILS	10/ 9/68
20-A -20	DETAIL 20	3/21/69
20-B -21	DETAIL 21	3/21/69
20-AB-50	DETAIL 50	10/ 9/68
20-A -51	DETAIL 51	10/ 9/68
20-AB-53	DETAIL 53	10/ 9/68
20-A -54	DETAIL 54	10/ 9/68
20-B -55	DETAIL 55	11/27/68
20-A -60	DETAIL 60	10/ 9/68
20-A -61	DETAIL 61	10/ 9/68
20-A -62	DETAIL 62	10/ 9/68
20-A -63	DETAIL 63	10/ 9/68
20-AB-64	DETAIL 64	6/24/69
20-A -65	DETAIL 65	3/21/69
20-A -66	DETAIL 66	10/ 9/68
20-AB-67	DETAIL 67	11/27/68
20-AB-68	DETAIL 68	11/27/68
20-A -69	DETAIL 69	10/ 9/68
20-B -70	DETAIL 70	11/27/68
20-B -71	DETAIL 71	3/21/69
20-AB-72	DETAIL 72	11/22/68
20-A -73	DETAIL 73	4/ 9/69
20-AB-75	DETAIL 75	8/19/69

LICENSED PROFESSIONAL ENGINEER — LESLIE E. ROBERTSON — No. 24360 — UNIVERSITY OF THE STATE OF NEW YORK

WTC-1044-L,2